Chapter 7
Oil Burner Test for Seat Cushions

7.1 Scope

7.1.1 Applicability

This test method evaluates the burn resistance and weight loss characteristics of aircraft seat cushions when exposed to a high-intensity open flame to show compliance to the requirements of FAR 25.853.

7.2 Definitions

7.2.1 Vertical Assembly

The vertical assembly is the back cushion located in the vertical orientation. The vertical assembly may be representative of the production seat back, seat bottom, or both if the production articles have the same construction.

7.2.2 Horizontal Assembly

The horizontal assembly is the bottom cushion in the horizontal orientation. The horizontal assembly may be representative of the production seat back, seat bottom, or both if the production articles have the same construction.

7.2.3 Seat Test Sample

A seat test sample consists of one vertical assembly and one horizontal assembly. Both assemblies represent the same production cushion constructions; that is, both vertical and horizontal assemblies in the seat test sample have identical construction and materials proportioned to correspond to either the actual seat bottom or back cushion, but not both. For various reasons, seat bottom and back cushions on actual aircraft seats are typically slightly different.

NOTE: Foam headrest and footrest cushions should be treated the same as vertical and horizontal assemblies and tested as complete samples if their construction is different from the seat bottom (horizontal) and/or seat back (vertical) cushions. In some cases, it may be reasonable to include the headrest as part of the seat back cushion. In such a case, the cushions should be constructed as for foam combinations.

7.2.4 Seat Test Sample Set

A seat test sample set consists of three or more replicate seat test samples.

7.2.5 Burn Lengths

The four principal burn lengths are measured along the topside of the horizontal assembly, bottom side of the horizontal assembly, front-side of the vertical assembly, and the backside of the vertical assembly. The four burn lengths are defined as the distance measured, in inches, from the outer edge of the test sample mounting frame (nearest the burner cone) to the farthest point where damage to the seat test sample occurred due to that area's combustion, including partial or complete consumption, charring, or embrittlement. However, this does not include areas which are merely sooted, stained, warped, or discolored.

7.2.6 Percent Weight Loss

The percentage weight loss for a seat test sample is the pretest weight of the seat test sample less the posttest weight of the seat test sample expressed as the percentage of the pretest weight. All droppings falling from the seat test sample and test sample mounting frame are to be discarded prior to determining the posttest weight.

7.3 Apparatus

7.3.1 Test Sample Apparatus

The test sample apparatus includes the seat test sample mounting frame and drip pan. The arrangement of the test sample apparatus is shown in figures 7-1 and 7-2.

7.3.1.1 Test Sample Mounting Frame

The test sample mounting frame for the seat test sample will be fabricated of 1- by 1- by 0.125-inch (25- by 25- by 3-mm) steel angle and 1- by 0.125-inch (25- by 3-mm) steel flat stock as shown in figure 7-1. The test sample mounting frame will be used for mounting the seat test sample horizontal and vertical assemblies. The position of the test sample mounting frame relative to the burner cone during testing must be positioned as shown in figure 7-2.

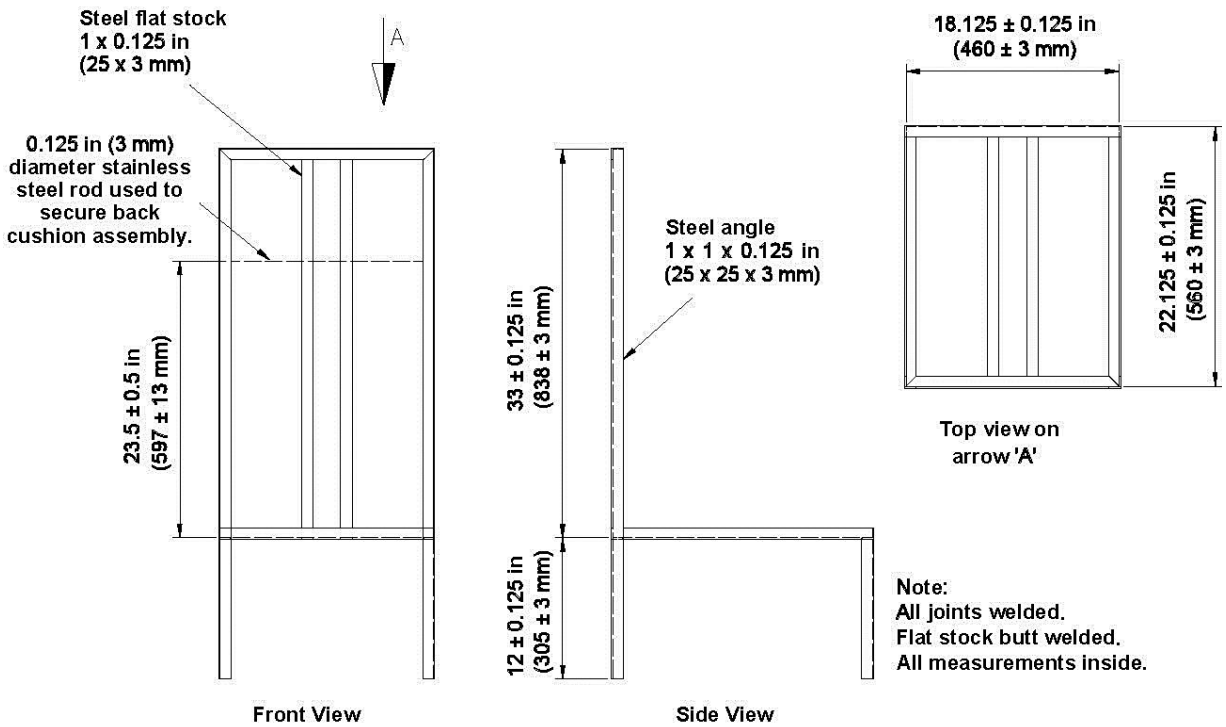

Figure 7-1. Front, Side, and Top Views of Test Sample Mounting Frame

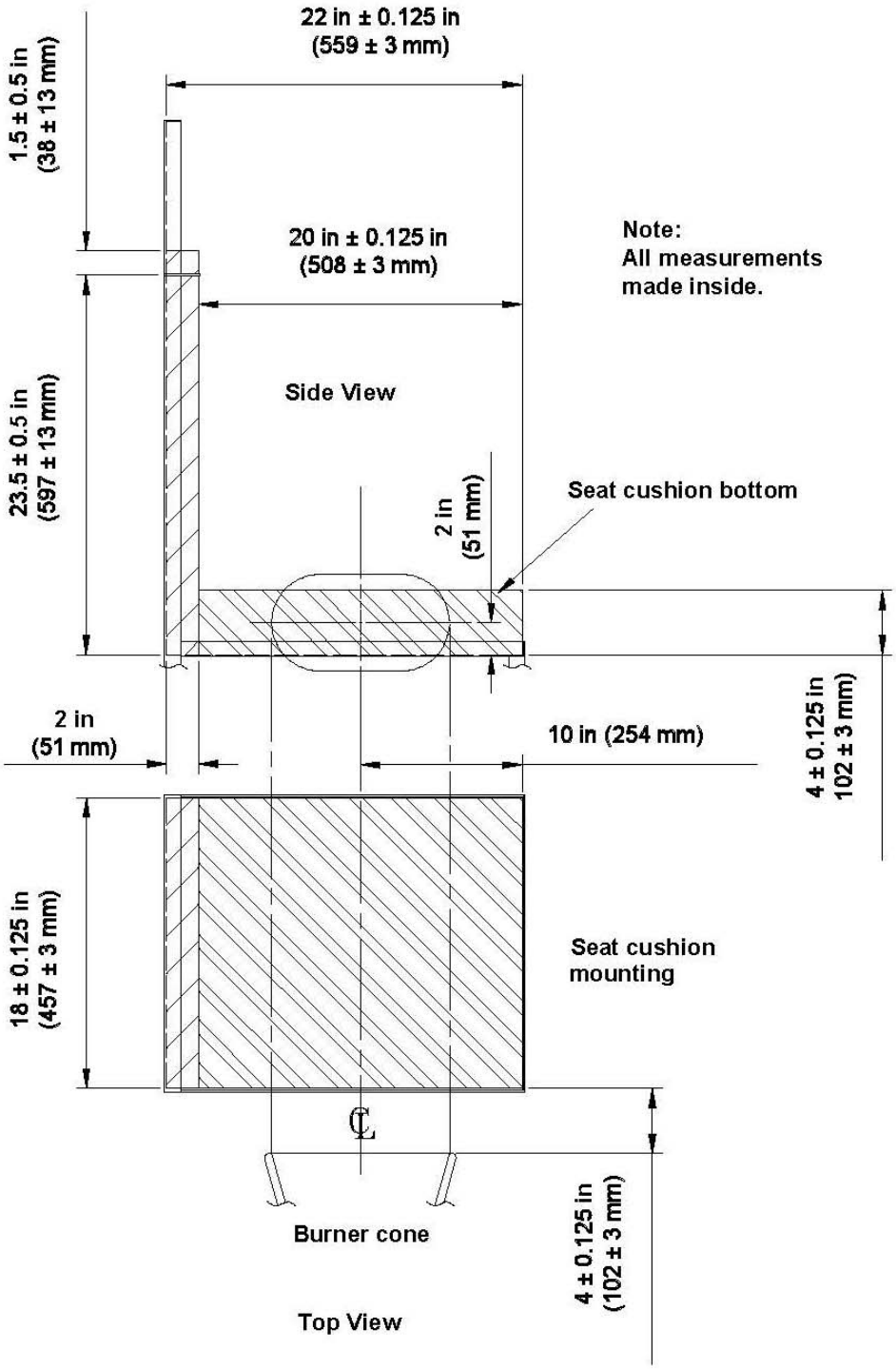

Figure 7-2. Top and Side View of Seat Test Sample in Test Sample Mounting Frame

7.3.1.1.1 Restraint Method for Fabric Dress Covered Samples

A stainless steel rod will be used to aid in securing the vertical seat cushion to the sample frame (figure 7-2). The rod will be uninsulated, solid, 0.125-inch (3-mm) in diameter and be located 1.5 ± 0.5 inches (38 ± 13 mm) from the top surface of the vertical cushion assembly as it sits in the sample test frame (figure 7-3).

7.3.1.1.2 Restraint Method for Leather Dress Covered Samples

Due to leather's tendency to shrink away from the flame during testing, both the vertical and horizontal cushion assemblies will require rod restraints. The rods must be uninsulated, solid stainless steel measuring 0.125-inch (3-mm) in diameter (figure 7-3). Two rods must be used to restrain the vertical assembly and one rod must be used to restrain the horizontal assembly as shown in figures 7-4 and 7-5.

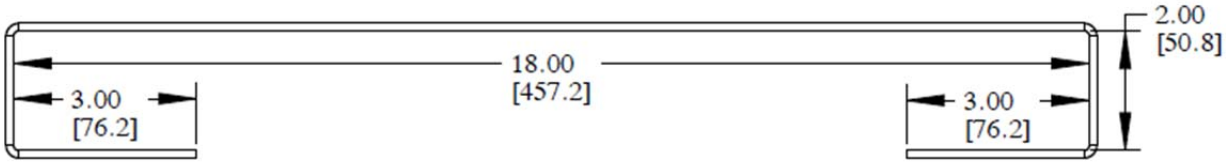

Vertical Assembly Restraint Rod

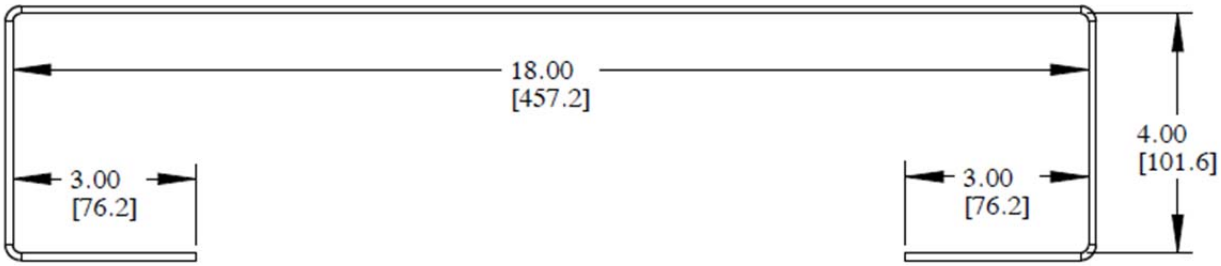

Horizontal Assembly Restraint Rod

Figure 7-3. Vertical Assembly and Horizontal Assembly Restraint Rods

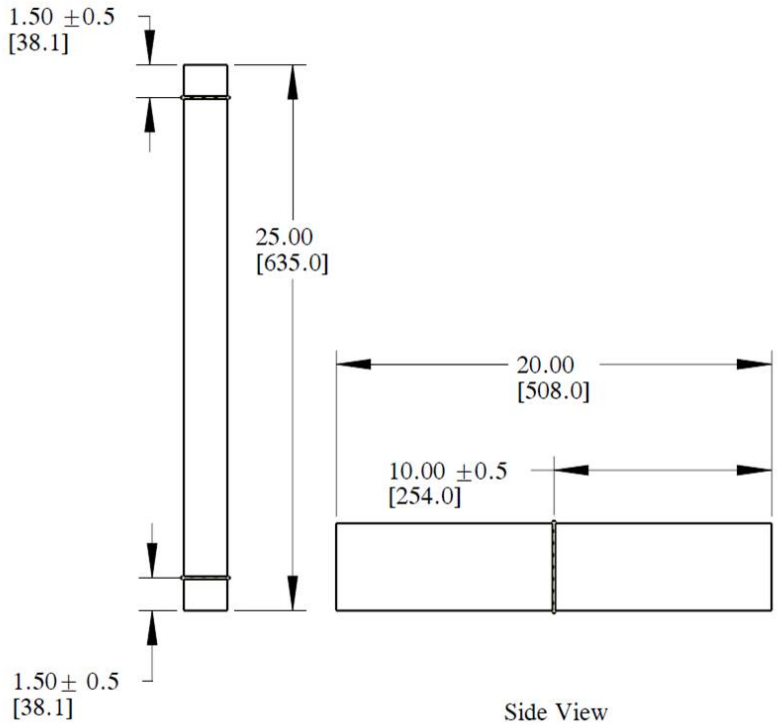

Figure 7-4. Side View of Restraint Rod Locations for Leather Covered Seat Test Samples

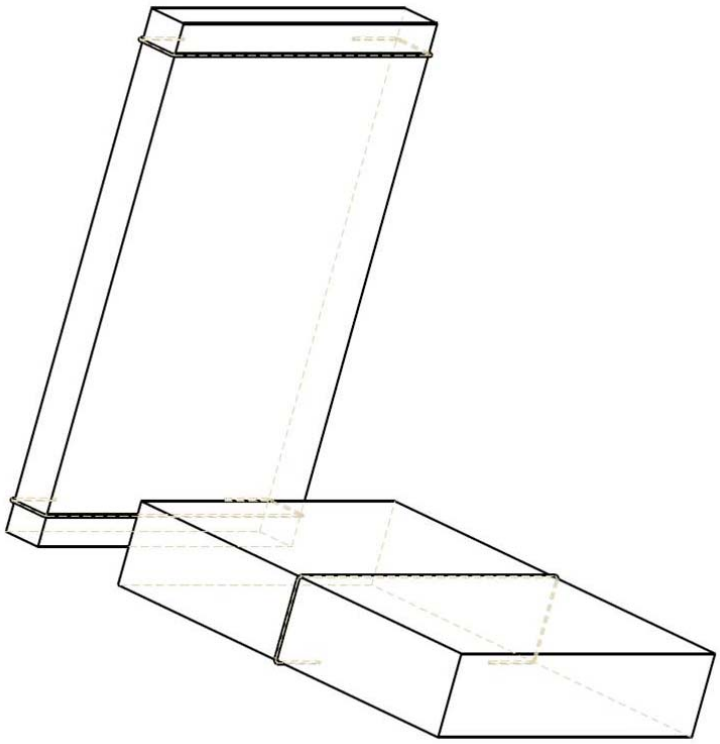

Figure 7-5. Leather Covered Seat Test Sample with Rod Restraints

7.3.1.2 Drip Pan

The test sample apparatus must include a suitable drip pan lined with aluminum foil with the dull (less reflective) side facing up. The drip pan must be located at the bottom of the test sample mounting frame legs at a distance of 12 inches (305 mm) or greater below the portion of the test sample mounting frame that supports the bottom (horizontal) cushion assembly.

7.3.2 Test Burner

The test burner will be a modified gun type, such as Park Model DPL 3400, Lennox Model OB-32, or Carlin Model 200 CRD, and will be mounted on a stand that has the capability of moving the burner away from the seat test sample during warmup. Flame characteristics can be enhanced by the optional use of a static disk or tabs as described in section 7.5.5. Major deviations, for example a different burner type, require thorough comparison testing. Temperature and heat flux measurements, as well as test results, must correspond to those produced by an FAA approved burner.

NOTE: If a sonic type burner is to be used, see Chapter 7 Supplement for all test burner information.

7.3.2.1 Fuel Nozzle

The fuel nozzle used for the burner is required to maintain a fuel pressure that will yield a 2 ± 0.1 gal/hr (7.57 L/hr ± 0.38 L/hr) fuel flow.

NOTE: A Monarch 80°AR or 80°R nozzle nominally rated at 2.25 gal/hr (8.52 L/hr) at 100 lb/in^2 (0.71 MPa) and operated at 85 lb/in^2 (0.6 MPa) gauge, has been found to deliver 2 gal/hr (7.57 L/hr) and produce a proper spray pattern. A Monarch 80° Constant Capacity (CC) nozzle, nominally rated at 2 gal/hr at 100 lb/in^2 and operated between 95 and 105 lb/in^2 gauge is also acceptable. Minor deviations to the fuel nozzle spray angle, fuel pressure, or other similar parameters are acceptable if the fuel flow rate, temperatures, and heat flux measurements conform to the requirements of sections 7.5 and 7.6.

7.3.2.2 Burner Cone

A 12 ± 0.125-inch (305 ± 3-mm) burner cone extension will be installed at the end of the draft tube. The cone will be made of 310 stainless steel or a similar type of noncorrosive high-temperature metal and will have a thickness of 0.050 ± 0.015 inch (1.27 ± 0.381 mm). The opening of the cone will be 6 ± 0.125 inches (152 ± 3 mm) high and 11 ± 0.125 inches (280 ± 3 mm) wide (figures 7-6a and 7-6b).

NOTE: Park type burner cones are 18 gauge 310 stainless steel or similar alloy while sonic type burners are 16 gauge 310 stainless steel.

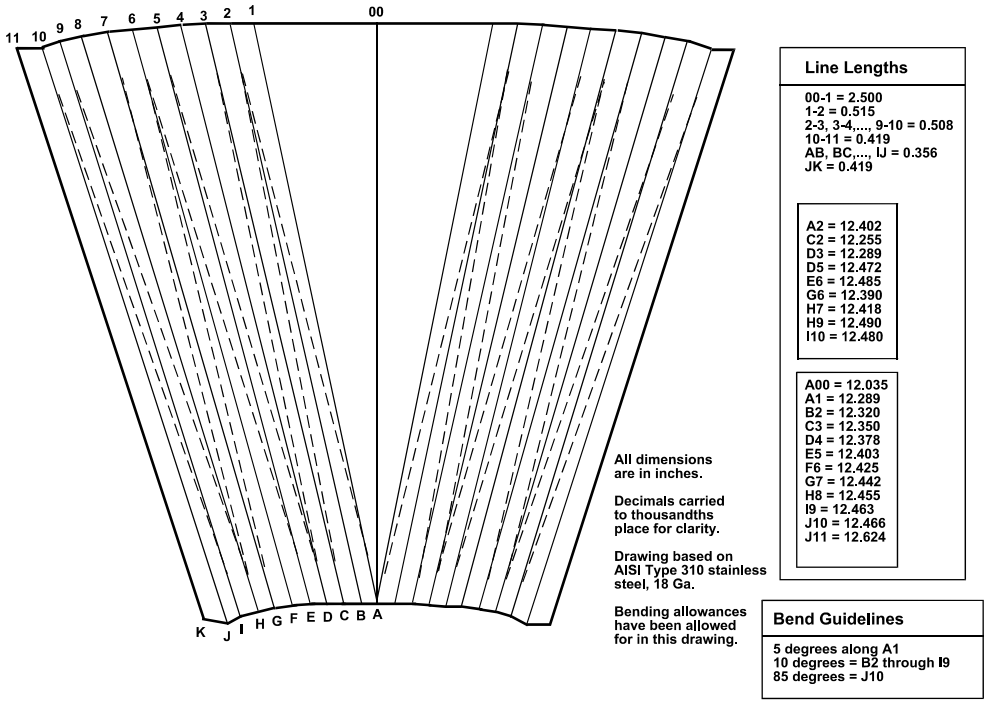

Figure 7-6a. Burner Cone Layout and Bending Pattern

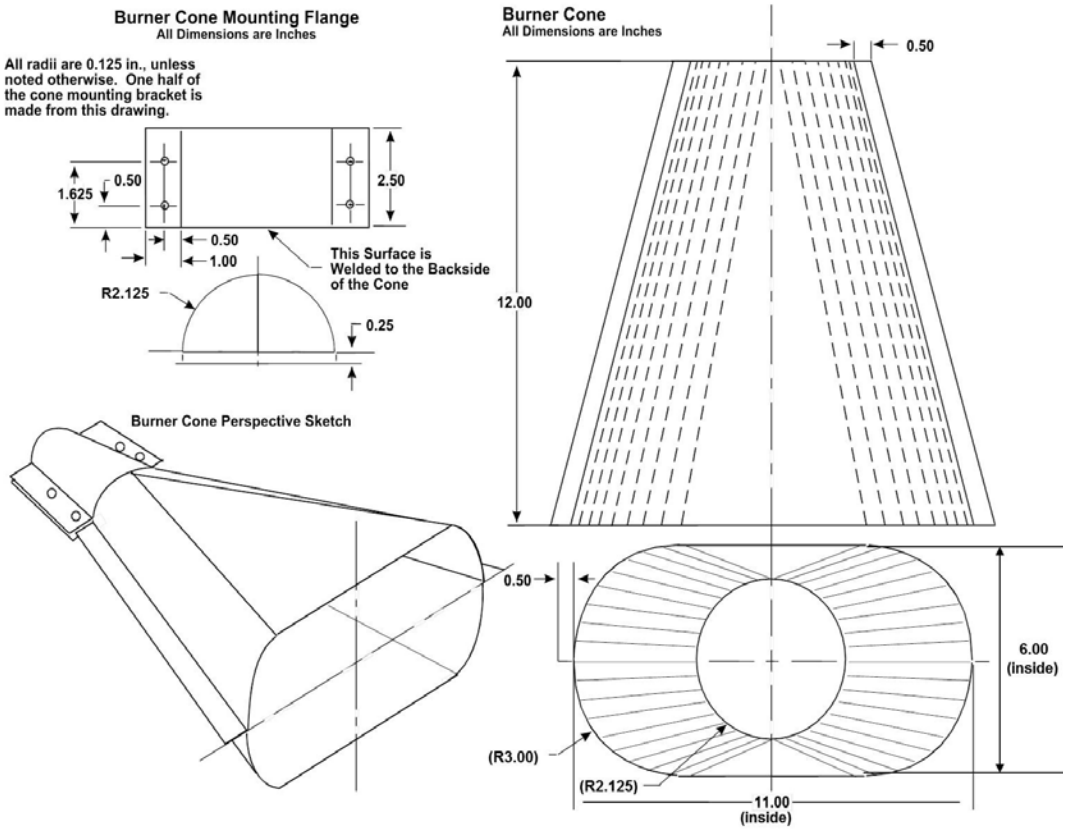

Figure 7-6b. Burner and Cone Details

7.3.2.3 Fuel

ASTM K2 fuel (number 2 grade kerosene) or ASTM D2 fuel (number 2 grade fuel oil) will be used.

NOTE: Number 2 diesel fuel, Jet A, or the international equivalent, is the recommended fuel because it has been found to produce satisfactory results if the fuel flow rate and inlet airflow conform to the requirements of sections 7.5 and 7.6.

7.3.2.4 Fuel Pressure Regulator

A fuel pressure regulator adjusted to deliver 2 gal/hr ± 0.1 gal/hr (7.57 ± 0.38 L/hr) will be provided.

NOTE: An operating fuel pressure of 85 ± 4 psig (0.57 ± 0.03 MPa) for a 2.25 gal/hr (8.52 L/hr) 80° spray angle nozzle has been found satisfactory.

7.3.2.5 Anemometer

A vane-type air velocity sensing unit will be used to monitor the flow of air at the inlet of the oil burner. The inlet will be completely sealed except for an opening for the air velocity sensor where it will be centered and mounted (anemometer setup in figure 7-7).

NOTE: The Omega microprocessor-based portable air velocity kit, model HH-30 (later updated to model HHF142B), is a recommended unit. The kit includes a vane-type air velocity sensor, hand-held digital readout displaying air velocity, extension rods, and a 9-volt lithium battery. Since the unit monitors air velocity in FPM or MPS ± 1 percent reading accuracy, necessary conversions must be made to attain airflow values. To do this, the area of the opening of the air sensor must be measured. Once the area is found, install the air velocity sensor at the oil burner inlet (figure 7-7). Following the procedures prescribed in section 7.5.4, this value should be multiplied by the air velocity reading. The area of the air velocity sensor for the Omega model HH-30 is 0.037 ft^2 [0.0034 m^2]. As an example, by maintaining an air velocity reading of 1811 ± 108 ft/min using the Omega air sensor described above, an air flow of 67 ± 4 ft^3/min should be achieved. If an air velocity sensor other than the Omega model HH-30 is being used, the same conversions apply.

$$\text{Airflow} = \text{Air Velocity} \times \text{Area of Opening (Air Velocity Sensor)}$$

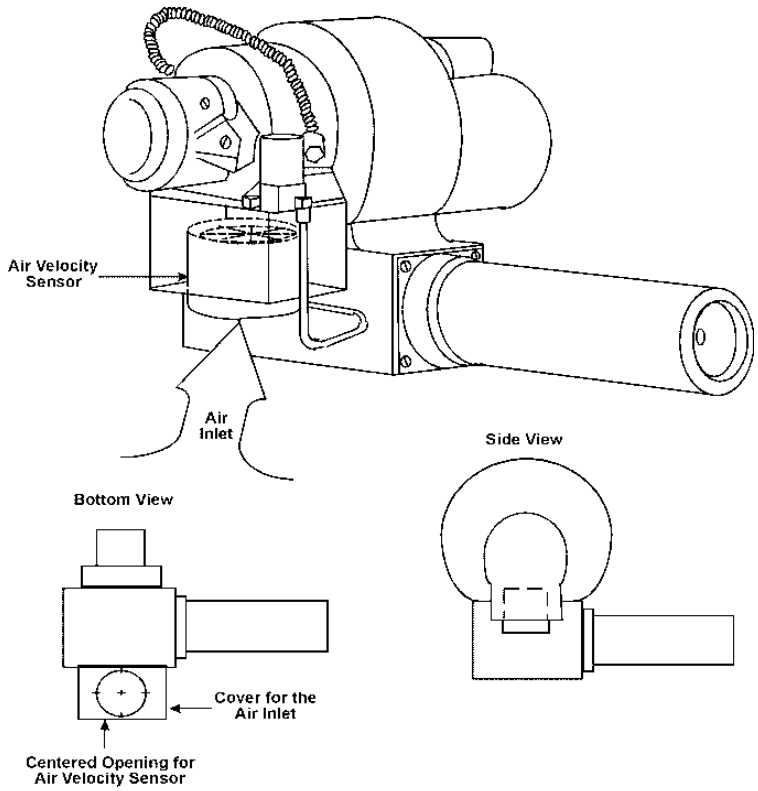

Figure 7-7. Illustration for the Location of the Air Velocity Sensor

7.3.3 Calorimeter

The calorimeter will be a total heat flux, foil type Gardon Gage of an appropriate range such as 0 to 15 Btu/(ft^2 second) (0 to 17 W/cm^2), accurate to ± 3 percent of the indicated reading.

7.3.3.1 Calorimeter Mounting

The calorimeter will be mounted in a 6 by 12 ± 0.125-inch (152 by 305 ± 3-mm) by 0.75-inch (19-mm) -thick insulating block that is attached to a steel angle bracket for placement in the test stand 4 ± 0.125 inches (102 ± 3 mm) from the burner cone exit plane and 1 inch (25 mm) above the horizontal centerline of the burner cone exit plane during burner calibration (figure 7-8). The insulating block will be monitored for deterioration and replaced when necessary. The mounting will be shimmed as necessary to ensure that the calorimeter face is parallel to the exit plane of the test burner cone.

7.3.4 Calibration Thermocouples

The seven thermocouples to be used for calibration will be 0.0625-inch (1.6-mm) ceramic packed, metal sheathed, type K (Chromel-Alumel), grounded junction thermocouples with a nominal 30 AWG size conductor. Thermocouples purchased with a certificate of calibration may provide more accurate readings but are not required. The thermocouples will be attached to a steel bracket to form a thermocouple rake for placement in the test stand 4 ± 0.125 inches (102 ± 3 mm) from the burner cone exit plane and 1 inch (25 mm) above the horizontal centerline of the burner cone exit plane during burner calibration (figure 7-9).

NOTE: The thermocouples are periodically subjected to high temperatures during calibration. Because of this type of cycling, the thermocouples may degrade with time. Small but continuing decreases or extreme variations in temperature or "no" temperature reading at all are signs that the thermocouple or thermocouples are degrading or open circuits have occurred. In this case, the thermocouple or thermocouples should be replaced in order to maintain accuracy in calibrating the burner. It is recommended that a record be kept for the amount of time and number of heat cycles the thermocouples are exposed to the oil burner's flame.

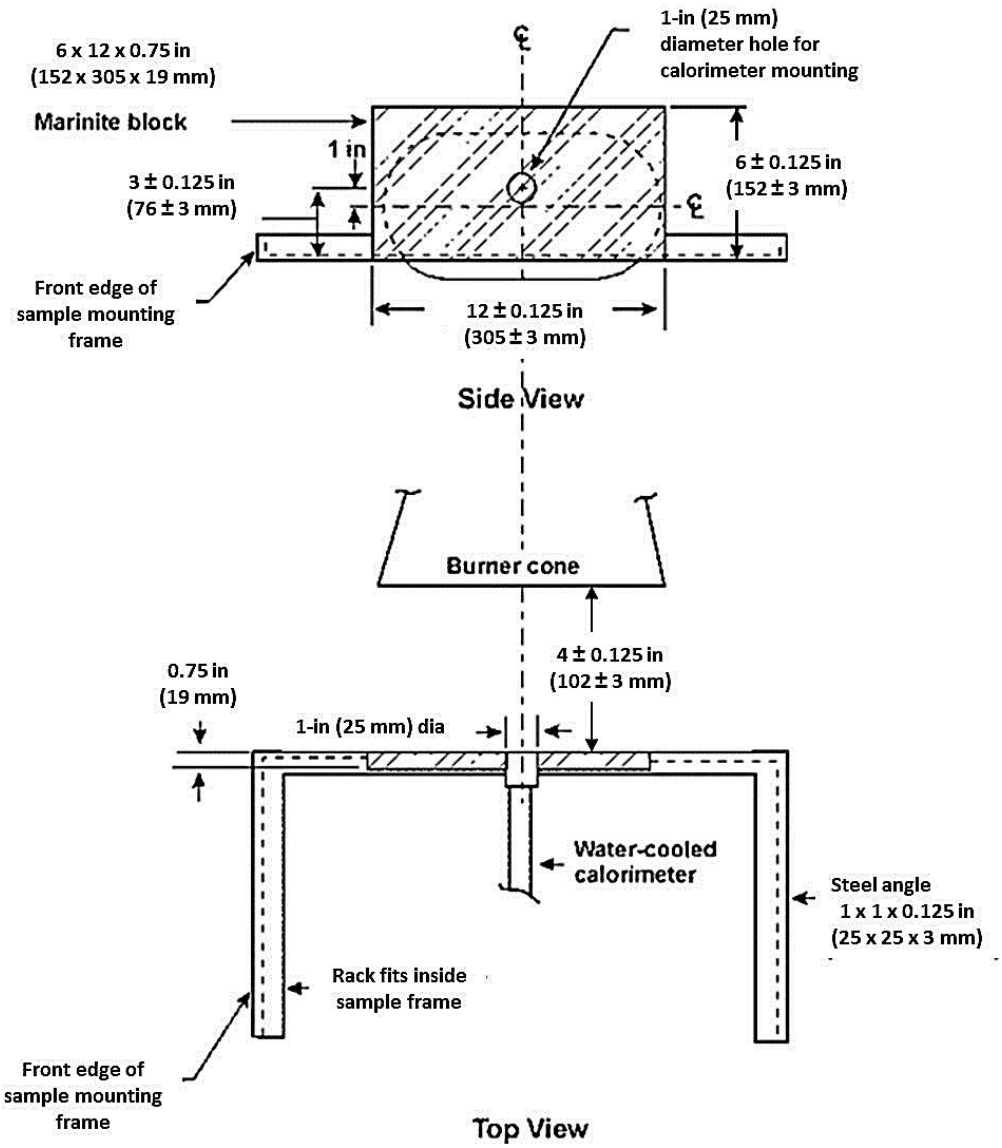

Figure 7-8. Top and Side Views of Calorimeter Bracket

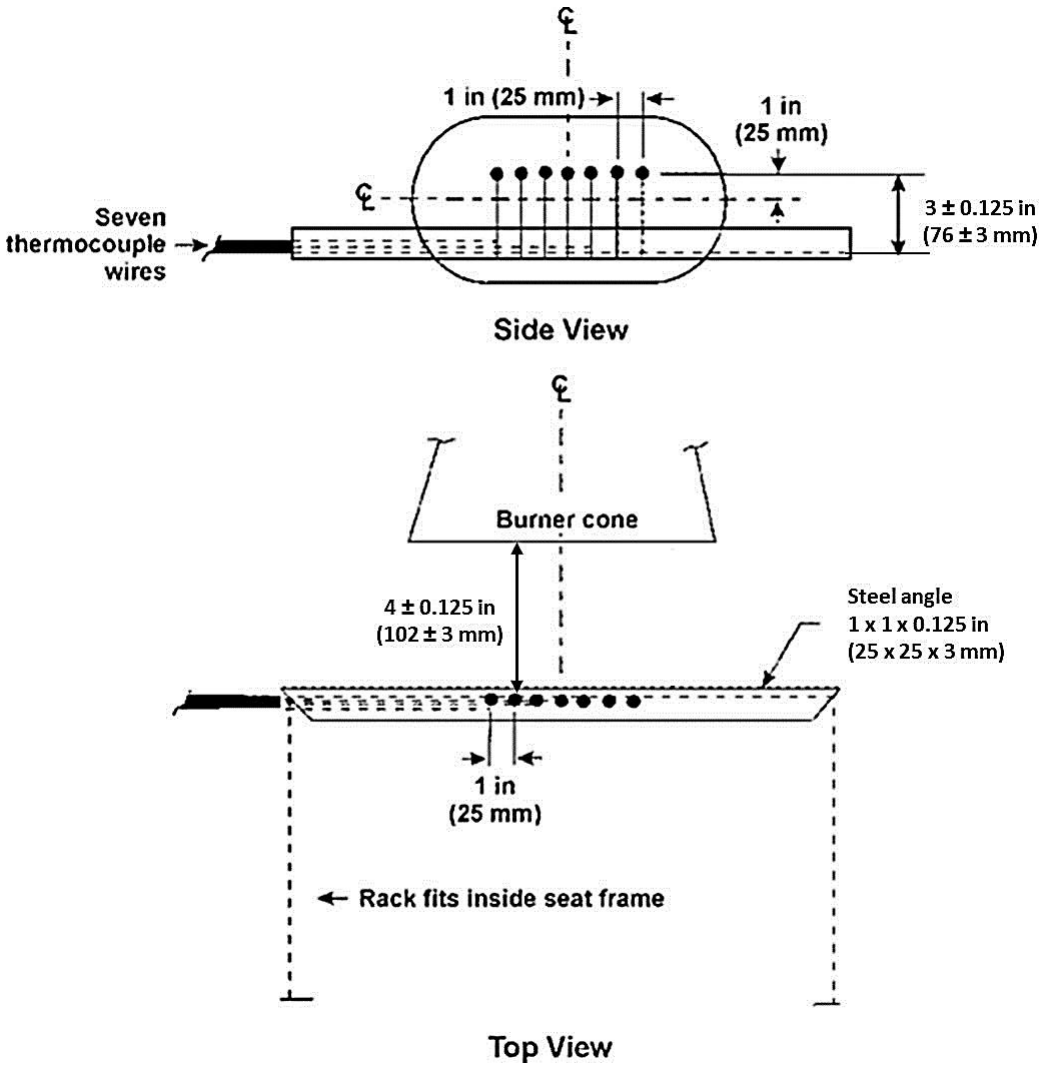

Figure 7-9. Top and Side Views of Thermocouple Rack Bracket

7.3.5 Instrumentation and Supporting Equipment

7.3.5.1 Data Acquisition

A calibrated recording device or a computerized data acquisition system with an appropriate range must be used to measure and record the outputs of the thermocouples.

7.3.5.2 Timing Device

A stopwatch or other device, accurate to within ± 1 second per 8 hours (± 3 seconds/day), must be used to measure the time of application of the burner flame, and the seat test sample extinguishment times.

7.3.5.3 Digital Weight Scale

A suitable weight scale must be used to determine the initial and final weights of the seat test sample. The scale must have a resolution of 0.02 lbs (0.01 kgs) and an accuracy of ± 0.02 lbs (± 0.01 kgs).

7.3.5.4 Test Chamber

A suitable test chamber must be used to reduce or eliminate the possibility of test fluctuation due to air movement. The recommended minimum of the test chamber floor area is 10 feet by 10 feet (3.05 m by 3.05 m) or larger.

NOTE: Smaller test cells may experience significant increases in ambient air temperature while testing. This may may increase the severity of the test.

7.3.5.5 Ventilation Hood

The test chamber must have an exhaust system capable of removing the products of combustion expelled during the tests.

7.3.5.6 Test Chamber Anemometer

A handheld vane-type or hot-wire type air velocity sensing unit suit for the specified test chamber air velocity ranges must be used to monitor the flow of air inside the test chamber when the ventilation hood is operating. Air flow measurements should be taken at the beginning of the day prior to operating the test burner as described in section 7.5.2.

7.4 Test Samples

7.4.1 Vertical Assembly (Back Cushion)

The constructed, finished vertical assembly must be 18 + 0, -0.125 inches (457 + 0, -3 mm) by 25 + 0, -0.125 inches (635 + 0, -3 mm), by 2 + 0, -0.125 inches (51 + 0, -3 mm), not including fabric closures (hook and loop, etc.) and seam overlap.

7.4.2 Horizontal Assembly (Bottom Cushion)

The constructed, finished horizontal assembly must be 18 + 0, -0.125 inches (457 + 0, -3 mm) by 20 + 0, -0.125 inches (508 + 0, -3 mm) by 4 + 0, -0.125 inches (102 + 0, -3 mm), not including fabric closures (hook and loop, etc.) and seam overlap.

7.4.3 Seat Test Sample Number

A minimum of three seat test samples of the same construction and configuration must be prepared for testing.

7.4.4 Test Sample Fabrication

Each seat test sample tested must be fabricated using the principal components (i.e., foam core, floatation material, fire blocking material, if used, and dress covering) and assembly processes (representative seams and closures) intended for use in the production articles. If a different material combination is used for the production back cushion than for the production bottom cushion, both material combinations must be tested as a complete seat test sample. Each seat test sample will consist of a vertical assembly and a horizontal assembly (figure 7-10).

NOTE: For lightweight seat test samples (test samples weighing less than 3 lbs.), refer to policy memo 25.853-1:

http://rgl.faa.gov/Regulatory_and_Guidance_Library/rgPolicy.nsf/0/4fd585eef694ebc4862575a700690bd4/$FILE/ANM-115-07-002.pdf

7.4.4.1 Fire-Blocking Material

If a cushion is constructed with a fire-blocking material, the fire-blocking material must completely enclose the cushion foam core material.

7.4.4.1.1 Seat Test Sample Fire-Blocking Fabrication

The method of fabricating blocking layer seams and closures must be the same as the production method. In fabricating a seat test sample, the fire blocker must be configured so that any possible weak point is exposed to the burner flame. This may require configuring a seat test sample so that the seam is exposed to the test burner, even though a seam may not be positioned as such on a production cushion.

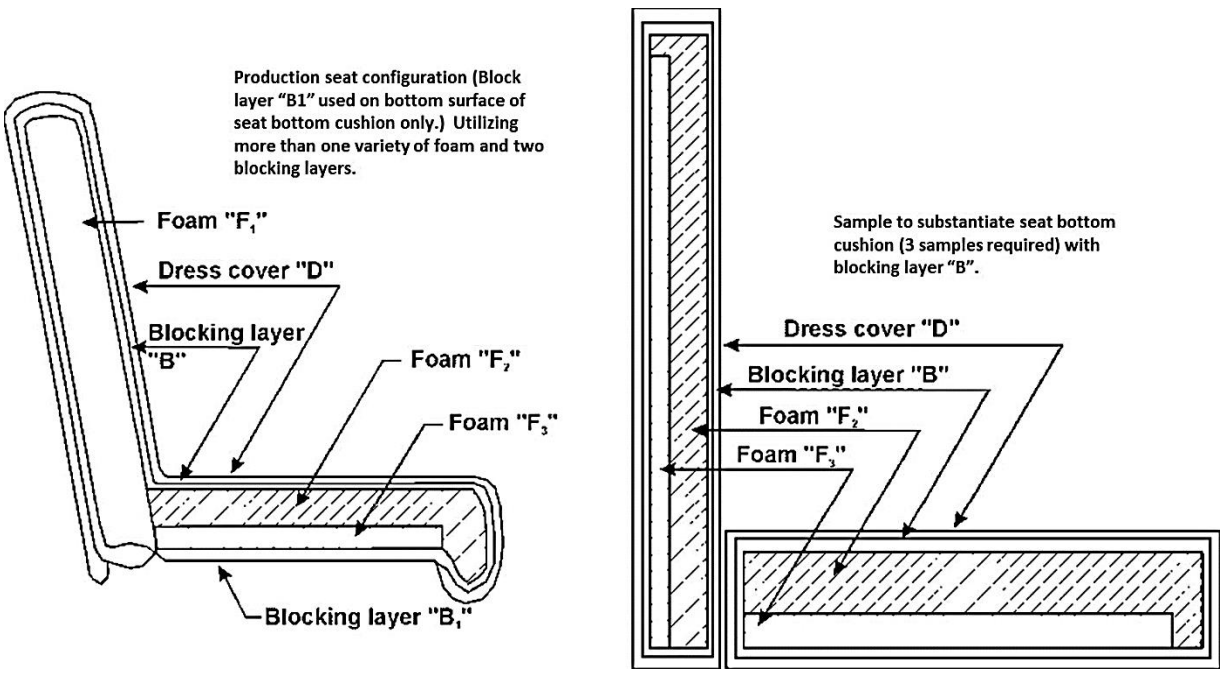

Figure 7-10. Example of Production Seat Configuration and Seat Test Sample to Substantiate Production Seat Bottom Cushion with Blocking Layer "B"

7.4.4.1.2 Multiple Fire-Blocking Materials

If more than one fire-blocking layer material is used on a given production cushion, each blocking layer material must be subjected to this test procedure as separate seat test samples with the fire-blocking material completely encapsulating both vertical and horizontal cushion assemblies so that all fire-blocking layers are subjected to the same level of test severity. Fire-blocking layers cannot be used in combination for this test. The example production cushion in figure 7-10 would require three different seat test sample constructions. One construction to substantiate the horizontal production cushion encapsulated in blocking layer "B" (figure 7-10), one construction to substantiate the horizontal production cushion encapsulated in blocking layer "B_1" and one construction to substantiate the vertical production cushion (both shown in figure 7-11).

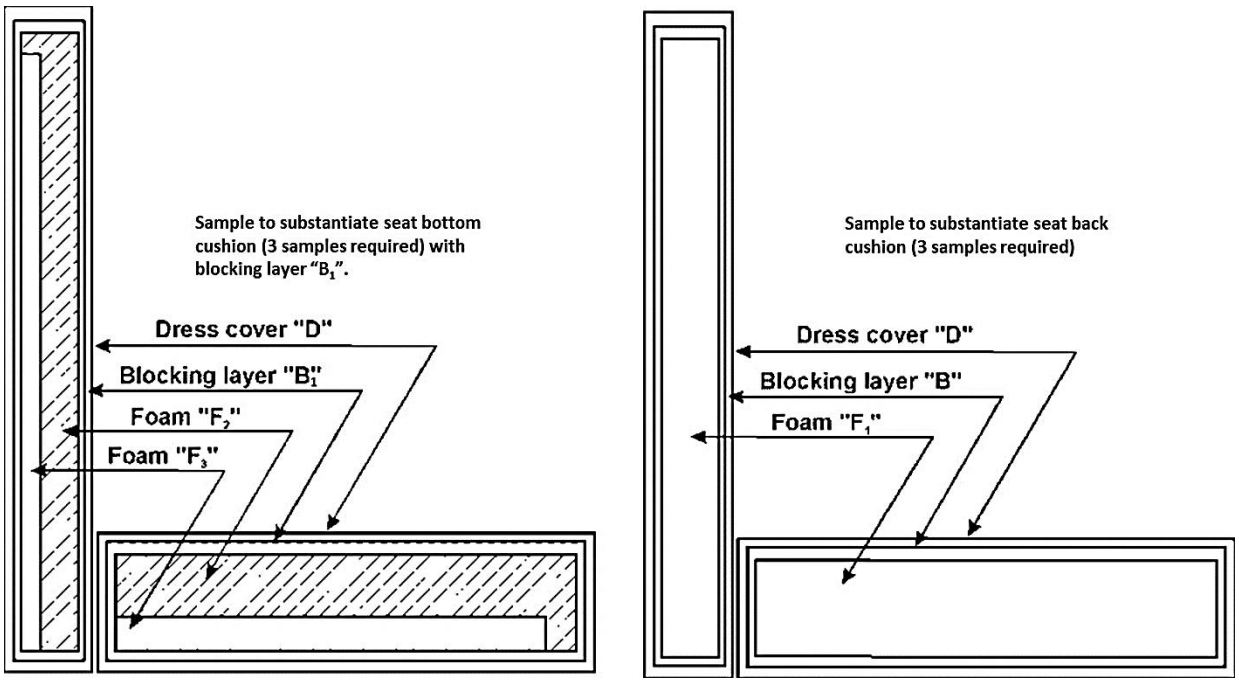

Figure 7-11. Seat Test Sample to Substantiate Production Seat Bottom with Blocking Layer "B_1" and Seat Test Sample to Substantiate Production Seat Back with Blocking Layer "B"

7.4.4.2 Foam

Seats that utilize more than one variety of foam (composition, density, etc.) will have seat test samples constructed that reflect the foam combination used.

NOTE: If several seat models use similar foam combinations, it is not necessary to test each combination if it is possible to bracket the various combinations. For example, if foam "A" makes up 80 percent and foam "B" makes up 20 percent of the foam volume in one seat model and in another similar seat model, foam "A" makes up 20 percent and foam "B" makes up 80 percent of the foam volume, it is generally acceptable to approve all combinations of "A" and "B" foams between these limits if the 20/80 and 80/20 extremes are tested and pass. In addition, for foams of a given chemical composition, low-density foam can be used in lieu of foams of higher density. In this case, as in the case of foam combinations, all other elements that make up the cushion must be the same (figure 7-10).

7.4.4.3 Dress Covering

If a production seat construction utilizes more than one dress covering, the seat test sample configuration may be represented as shown in figure 7-12.

NOTE: When any seat construction tested has passed, a separate test is not required for another seat construction if the only difference from the first test is the dress covering, provided the replacement dress covering is comprised of a similar weave design and fiber type, as described in section 7.4.4.3 and the burn length of the replacement dress

covering, as determined by the Bunsen burner test specified in FAR 25.853(a), does not exceed the burn length of the dress covering used for the test.

Seat test samples are intended to represent the principal material elements and construction methods of the production seats. Items decorative in nature, such as buttons, detail stitching, hand-hold straps, Velcro® attached strips, or thin outer cover paddings, such as armrest covers and filler around food trays, that do not penetrate the fire-blocking layer when fastened are not required to be represented on the test sample. Dress cover details and items not associated with the cushion construction, such as metal seat pans or other metal structures, should not be included in the sample weight since they are not part of the principal seat construction. Layers of padding or filler immediately under the dress cover material are considered to be part of the dress cover material and should be included in the seat test samples.

Similar dress covering (from Advisory Circular 25.853-1, "Flammability of Aircraft Seat Cushions," Sections 5d[1] and [2]) refers to dress covering materials having the same material composition, weave style, and weight. Material blends can be considered similar when the constituent materials fractions are the same, ± 6 percent, as the tested material. Examples of different weave styles include plain, jacquard, or velvet. With regard to weight, lighter fabrics are generally more critical than heavier fabrics. Due to the severe shrinking and unpredictable distortion experienced by leather dress cover materials, similarity approvals for leather are not recommended.

Certification by similarity to previously tested dress covers should be limited to instances where the material composition is the same and the weight and weave type are essentially the same. In all cases, results of the Bunsen burner test per FAR 25.853(a) for the new material should be equal to or better with respect to burn length than the tested material. In addition, it may be useful to evaluate the weight loss and burn length results of the oil burner test to determine if the tested material is a good basis for similarity; that is, the closer weight loss and burn length with the oil burner are to the maximum allowed, the more alike the dress covering materials should be for similarity. In general, test data and resultant experience gained from conducting tests should also be a major source of information to determine if approval by similarity is acceptable.

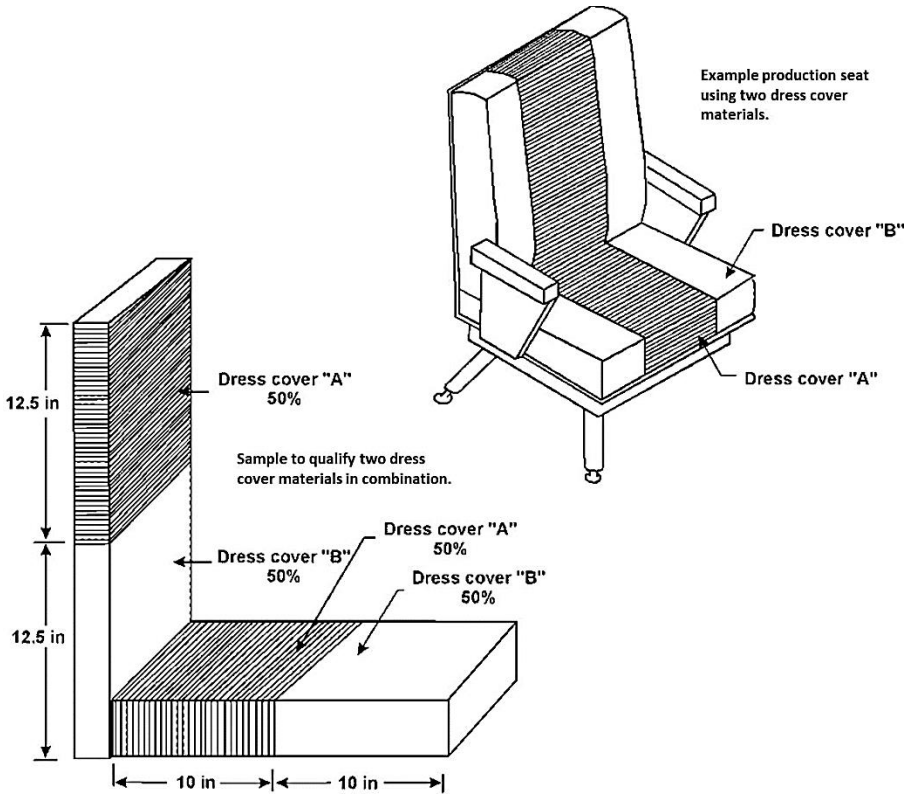

Figure 7-12. Example of Production Seat Configuration Using Two Dress Cover Materials and a Seat Test Sample to Substantiate Dress Cover Combination

7.4.5 Seat Test Sample Conditioning

The seat test samples will be conditioned at 70° ± 5°F (21° ± 3°C) and 55% ± 10% relative humidity for a minimum of 24 hours prior to testing.

7.5 Preparation of Apparatus

7.5.1 Level and center the frame assembly to ensure alignment of the calorimeter with the burner cone in the test position.

7.5.2 Turn on the ventilation hood for the test chamber. Do not turn on the burner air, fuel, or ignition. Measure the airflow in the test chamber using a hot wire anemometer or equivalent measuring device. The vertical air velocity just behind the top surface of the vertical (cushion) assembly will be 25 ± 10 ft/min (12.7 ± 5.1 cm/second). The horizontal air velocity will be less than 10 ft/min (5.1 cm/second) just above the center of the horizontal (cushion) assembly.

NOTE: The language of paragraph 7.5.2 can be met by measuring the vertical air velocity at four points. These points are located behind the vertical (cushion) assembly, 0.5 inches (13 mm) from the rear-facing vertical surface, 2 inches (51 mm) below the vertical assembly top surface, 2 inches (51 mm) above the vertical assembly bottom surface, and horizontally

positioned 6 inches (152 mm) from each side (figure 7-13). The measurements do not need to be made simultaneously, precluding the need for multiple anemometers. However, these measurements should be made in the same calibration cycle. The horizontal air velocity can be measured 0.5 inches (13 mm) above the geometric center of the upper horizontal assembly surface (figure 7-13).

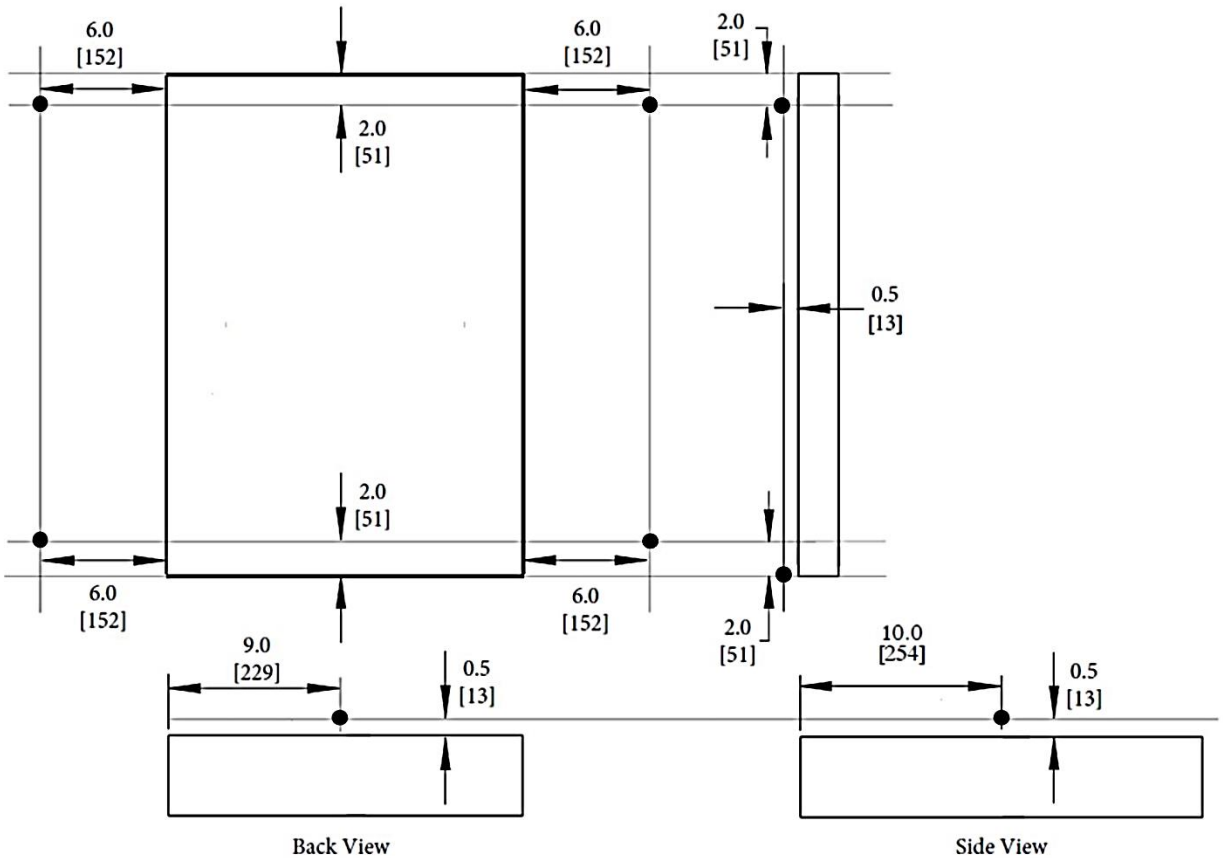

Figure 7-13. Back and Side View of Seat Test Sample with Dots Indicating Air Velocity Measurement Locations

7.5.3 The fuel flow rate will be 2.0 ± 0.1 gal/hr (7.57 ± 0.38 L/hr).

NOTE 1: If a calibrated flow meter is not available, measure the fuel flow directly using a length of Tygon® tubing and appropriately sized graduated cylinder. Slip the Tygon® tubing over the end of the fuel nozzle, making certain to establish a good seal. Direct the exit of the Tygon® tubing into a small bucket or other collection basin. Turn on the fuel solenoid, making sure the ignition system is off. After establishing a steady stream of fuel flow, simultaneously direct the tubing exit into the graduated cylinder while beginning the stopwatch or timing device. Collect the fuel for a 2-minute period, making certain to immediately direct the tubing exit away from the graduated cylinder at precisely 2 minutes. Calculate the flow rate and ensure that it is 2 ± 0.1 gal/hr (7.57 ± 0.38 L/hr). If the flow rate is not within the tolerance, adjust the fuel pressure accordingly.

NOTE 2: It is important to establish a steady stream of fuel before starting the fuel flow measurement process. It is recommended the fuel flow steadily from the hose for a minimum 10-second period before collecting fuel in the graduated cylinder.

7.5.4 The air inlet of the oil burner must be completely sealed, except for an opening where the air monitoring device will be mounted. With the anemometer set up for measuring, turn the motor on and run it for at least 30 seconds to allow the blower to reach its operating speed (it is not necessary for the ignitor and fuel flow to be turned on). Set the airflow to 67 ± 4 ft^3/min (1.89 ± 0.11 m^3/min) by adjusting the air shutter (paragraph 7.3.2.5). Once this airflow value is maintained, keep the air shutter in position by tightening the lock screw. This will be the initial airflow setting. Later adjustments, within the specified airflow range, may be necessary to attain the calibration temperatures and heat flux.

7.5.5 Static Disks

Static disks were developed to stabilize the air before entering the combustion area. Two were designed by Park Oil Burner Manufacturing Company of Atlantic City, New Jersey. The Park Oil Burner disks are both made of steel (figure 7-14). Disks 1 and 2 are made for easy assembly, only requiring the removal of the draft tube and installation of the disk. Disk 3 was developed by CEAT, the French Ministry of Defense. The disk is made of a Nomex honeycomb material. CEAT uses two honeycomb disks positioned behind the stabilizer.

These disks (any one or more of the three) are an optional feature used to help produce a more full and even flame. However, there is no guarantee of achieving calibration using a disk with all of the various makes and models of burners used throughout the industry.

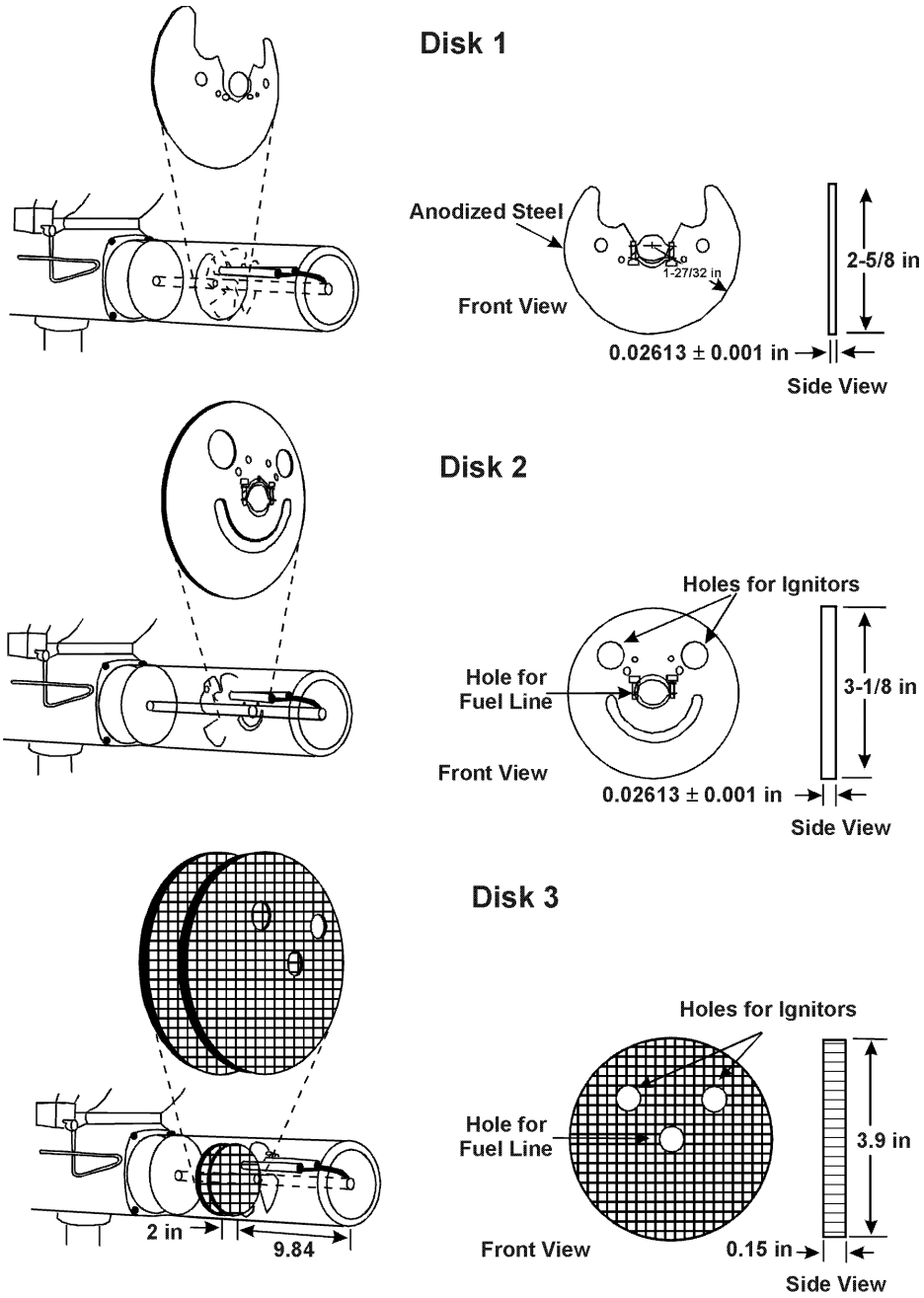

Figure 7-14. Static Disk Illustration

Recommendations for achieving calibration temperatures:

1. Set the stabilizer 3.25 ± 0.25 inches from the end of the draft tube.

2. Rotate the ignitor to the 6 o'clock and 9 o'clock position (viewpoint: looking toward the stabilizer from the end of the draft tube).

3. Seal all possible air leaks around the burner cone and draft tube area.

4. Install and secure static disk to improve flame characteristics (figure 7-14).

7.6 Calibration

7.6.1 Secure the calorimeter in the bracket and place it on the test sample mounting frame used to mount the seat test samples. Position the burner so that the vertical plane of the burner cone exit is centered in front of the test sample mounting frame at a distance of 4 ± 0.125 inches (102 ± 3 mm) from the calorimeter face. Ensure that the horizontal centerline of the calorimeter is offset 1 ± 0.0625 inch (25.4 ± 1.6 mm) above the horizontal centerline of the burner cone (figure 7-8).

7.6.1.1 Prior to starting the burner, ensure that the calorimeter face is clean of soot deposits and that there is water running through the calorimeter.

NOTE: Operating the calorimeter without water running through it could permanently damage the calorimeter.

7.6.2 Rotate the burner away from the test position to the warmup position. Examine and clean the burner cone of any evidence of buildup of productions of combustion, soot, etc.

NOTE: A stainless steel wire brush is one possible cleaning tool. Soot buildup inside the burner cone can affect the flame characteristics and cause calibration difficulties. Since the burner cone may distort with time, dimensions will need to be checked periodically.

7.6.3 While the burner is rotated out of the test position, turn on the fuel and light the burner. Allow it to warmup for 2 minutes. Rotate the burner into the test position and adjust the air intake and oil burner components to achieve a heat flux of 10 Btu/ft^2 second or greater (11.36 W/cm^2 or greater). Record heat flux density measurements at least once per second averaged over a 30-second time period to ensure a steady-state condition.

7.6.4 Replace the calorimeter bracket with the thermocouple rake, ensuring that the distance of each of the seven thermocouples is 4 ± 0.125 inches (102 ± 3 mm) from the vertical exit plane of the cone and offset 1 ± 0.0625 inch (25.4 ± 1.6 mm) above the horizontal centerline of the burner cone exit plane (figure 7-9).

7.6.5 Start the burner and allow it to warm up for 2 minutes. After warmup, rotate the burner into the test position and allow one minute for thermocouple stabilization, then record the temperature of each thermocouple at least once every second averaged over a 30-second time period. Of the seven thermocouples used, any two will be equal to or greater than 1750°F (954°C), while the remaining thermocouples will each be equal to or greater than 1800°F (982°C). The average of the seven thermocouples must be equal to or greater than 1800°F. After a steady-state condition has been achieved with the required temperatures mentioned above, turn off the burner.

NOTE: It is advisable to run within reasonable bounds of the heat flux and temperature requirements in sections 7.6.3 and 7.6.5. If the heat flux and temperature are significantly higher, erratic data may occur.

7.6.6 If the temperature of each thermocouple is not within the specified range, repeat sections 7.6.1 through 7.6.5 until all parameters are within the calibration.

7.6.7 When calibration is attained, tighten the air shutter's lock screw.

NOTE 1: Calibrate the burner prior to each test until consistency has been demonstrated. After consistency has been confirmed, several tests can be conducted with calibration before and after each series of tests.

NOTE 2: If a sonic type burner is to be used, see Chapter 7 Supplement for "flame validation procedure" and all test burner information.

7.7 Test Procedure

7.7.1 Record the weight of a seat test sample to the nearest 0.02 pound (0.01 kgs).

7.7.2 Secure the seat test sample to the test sample mounting frame. The seat test sample vertical assembly can be secured at the top with a 0.125-inch diameter stainless steel rod. Reference sections 7.3.1.1.1 and 7.3.1.1.2 for guidance information on securing samples.

7.7.3 Ensure that the vertical exit plane of the burner cone is at a distance of 4 ± 0.125 inches (102 ± 3 mm) from the seat test sample horizontal assembly and that the horizontal centerline of the burner cone exit plane is aligned with the horizontal centerline of the seat test sample horizontal assembly, as shown in figure 7-2.

NOTE 1: It is important to ensure the burner cone is aligned to the horizontal assembly when testing a sample as described in section 7.7.3. The position of the burner relative to the test sample mounting frame may differ slightly due to dimensional tolerances.

NOTE 2: Dress cover features such as hook and loop closures may protrude beyond the dress covering material. The additional thickness of such features are not to be included in the 4 ± 0.125 inch (102 ± 3 mm) distance from the seat test sample horizontal assembly to the vertical centerline of the burner cone exit plane.

7.7.3 When ready to begin the test, move the burner or test sample apparatus away from the test position to the warmup position so that the flame will not impinge on the seat test sample. Turn on and light the burner and allow it to stabilize for 2 minutes.

7.7.4 To begin the test, move the burner or test sample apparatus into the test position and start the timing device when the burner or test sample apparatus is in the final position.

7.7.5 Expose the seat test sample to the burner flame for 2 minutes and then turn off the burner. Immediately move the burner or test sample apparatus out of the test position.

7.7.6 Terminate the test when the seat test sample self-extinguishes. If the sample does not self-extinguish after 5 minutes from the time the burner had been turned off, terminate the test by extinguishing the seat test sample.

7.7.7 Immediately after test termination, determine the posttest weight of the remains of the seat test sample to the nearest 0.02 pound (0.01 kg), excluding droppings.

7.7.8 Measure the four burn lengths of the seat test sample.

NOTE: An industry practice acceptable to the FAA for determining cushion assembly burn length damage has been to use an object with a dull point, such as a pencil, and scrape the dress covering. If the object used penetrates the dress covering, damage has occurred due to that area's combustion. If the dress covering is not penetrated, damage has occurred due to pyrolysis and is not considered damaged by combustion.

7.8 Report

7.8.1 Identify and describe the seat test sample being tested. Report the type of foam (flame retardant [FR] molded or cut); foam density, if known; and manufacturer and type of FR treatment if known.

7.8.2 Report the number of seat test samples tested.

7.8.3 Report the pretest and posttest weight of each seat test sample, the calculated percentage weight loss of each seat test sample, and the calculated average percentage weight for the total number of seat test samples tested.

7.8.4 Report each of the four burn lengths for each seat test sample tested.

7.8.5 Provide a record of burner flame calibration if a Park type burner is used, or flame temperature validation record if a sonic type burner is used.

7.9 Requirements

7.9.1 For each of the burn lengths measured, the burn length may not exceed 17 inches (43.2 cm) on at least two-thirds of the total number of samples tested.

NOTE: Should the burn length on the underside of the horizontal (cushion) assembly extend to the frame angle support farthest from the burner cone, it is considered to have exceeded the 17 inch burn length criteria i.e., it has reach the side of the cushion opposite the burner, and is a failure. (figure 7-15).

7.9.2 The combined average percentage weight loss of all samples tested will not exceed 10 percent.

7.9.3 The individual percentage weight loss of at least two-thirds of the total number of samples tested will not exceed 10 percent.

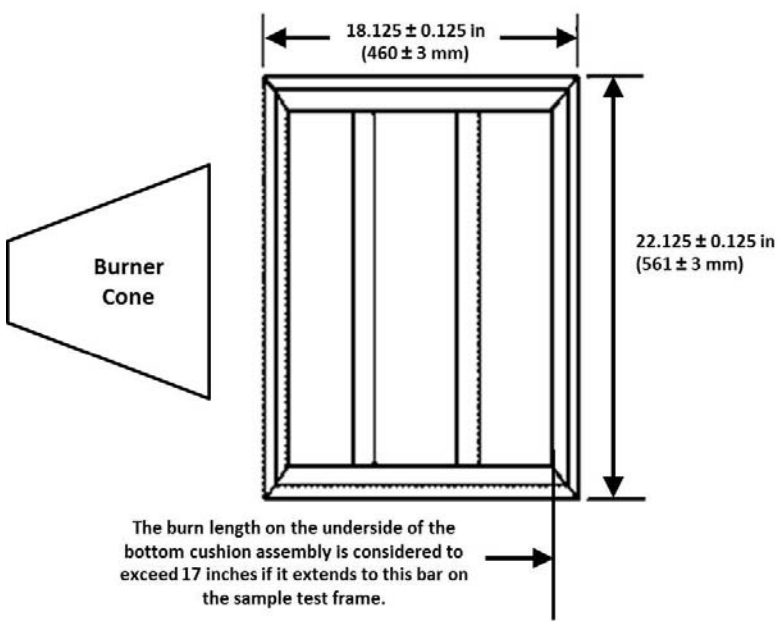

Figure 7-15. View from above Test Sample Frame Assembly

Chapter 7 Supplement
Sonic Burner

Apparatus

The test sample frame must be capable of moving a minimum distance of 36 inches (914.4 mm) away from the stationary burner during warmup (figure 7-S-1).

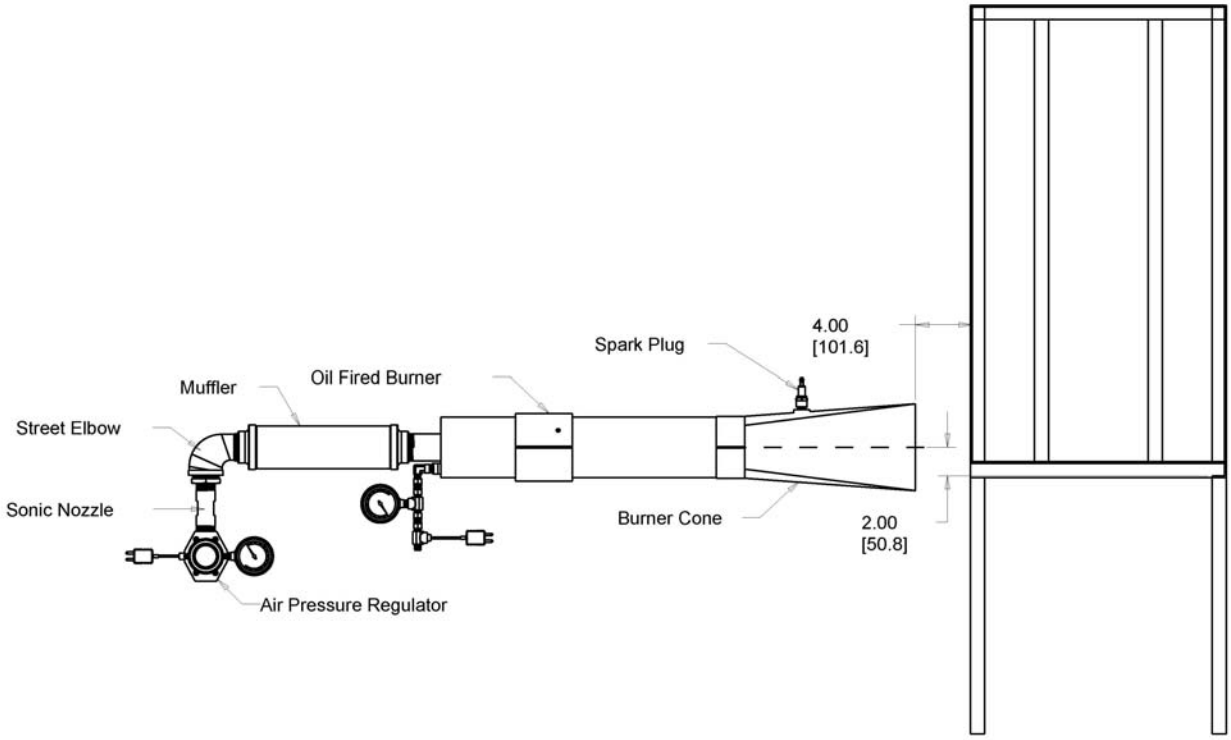

Figure 7-S-1. Test Apparatus for Seat Cushion Oil Burner Testing

Test Burner

This section describes in detail the Federal Aviation Administration Next Generation Fire Test Burner (NexGen), also known as the Sonic burner. The Sonic burner is specified in multiple FAA fire test methods, although certain burner adjustments differ according to each specific test method.

The burner is a gun-type, using a pressurized, sprayed fuel charge in conjunction with a ducted air source to produce the burner flames. An interchangeable, screw-in fuel nozzle will be used to produce the conically-shaped fuel charge from a pressurized fuel source. A pressurized air source controlled via a regulated sonic orifice will supply the combustion air. The combustion air will be ducted through a cylindrical draft tube containing a series of diffusing vanes. There are several types of internal vanes used to diffuse the combustion air. The diffused combustion air will mix with the sprayed fuel charge in a bell-shaped combustion cone. The fuel/air charge will be ignited by a high-voltage spark plug positioned in the burner cone. Flame characteristics can be adjusted by varying the pressure of the

regulated air into the sonic orifice. A schematic of the Sonic fire test burner is displayed in figure 7-S-2.

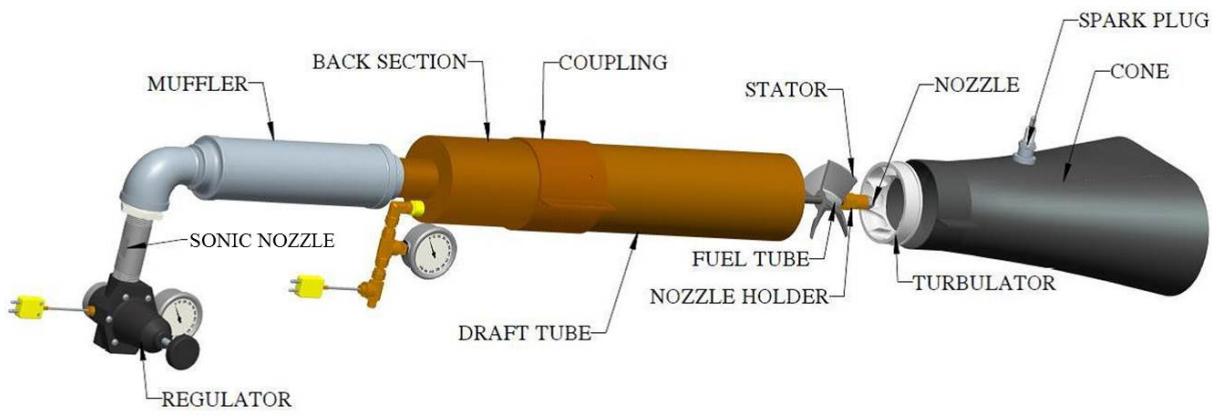

Figure 7-S-2. Schematic of the Sonic Burner - Exploded View

Burner Housing

The burner housing is comprised of three main sections, the draft tube, the coupling, and the back section. The draft tube is constructed of 4-inch inner diameter steel tubing with a wall thickness of 0.125-inch (3.2-mm). The length of the draft tube is 15 inches (381 mm), with 3 inches (76.2 mm) of the tube inserted into the coupling, resulting in a coupling-to-tip distance of 12 (304.8 mm) inches (figure 7-S-3). The coupling is constructed of 4.25-inch (108-mm) inner diameter steel tubing that is 4 inches (102 mm) long with an outer diameter of 4.75 inches (120.7 mm). Three set-screw holes are 120 degrees apart and are drilled 1 inch (25.4 mm) in from the edge to hold the draft tube in place. The coupling has two mounting brackets welded to the sides for easy mounting and adjustment (figure 7-S-4). The back section is made of the same 4-inch (101.6-mm) tubing as the draft tube, but is 6 inches (152.4 mm) long, with 1 inch (25.4 mm) inserted into the coupling and welded in place (figure 7-S-5). A back plate is constructed of a 0.25-inch (6.4-mm) steel plate cut into a 4.25-inch (108-mm) diameter circle to cap the back section, with holes for the air inlet and fuel inlet (figure 7-S-6). A 1.5-inch National Pipe Thread (NPT) pipe nipple is cut to a length of 2.90 inches (73.7 mm) and welded into the 1.90-inch (48.3-mm) diameter recess cut to a depth of 0.145 inches (3.68 mm) on the center of the back plate (figure 7-S-7).

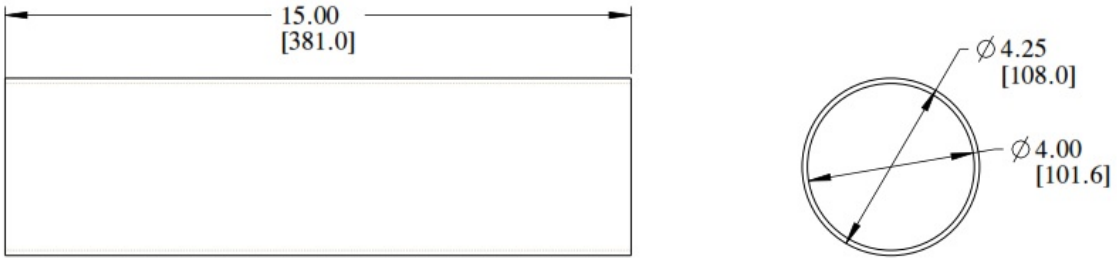

Figure 7-S-3. Dimensioned Drawing of the Draft Tube

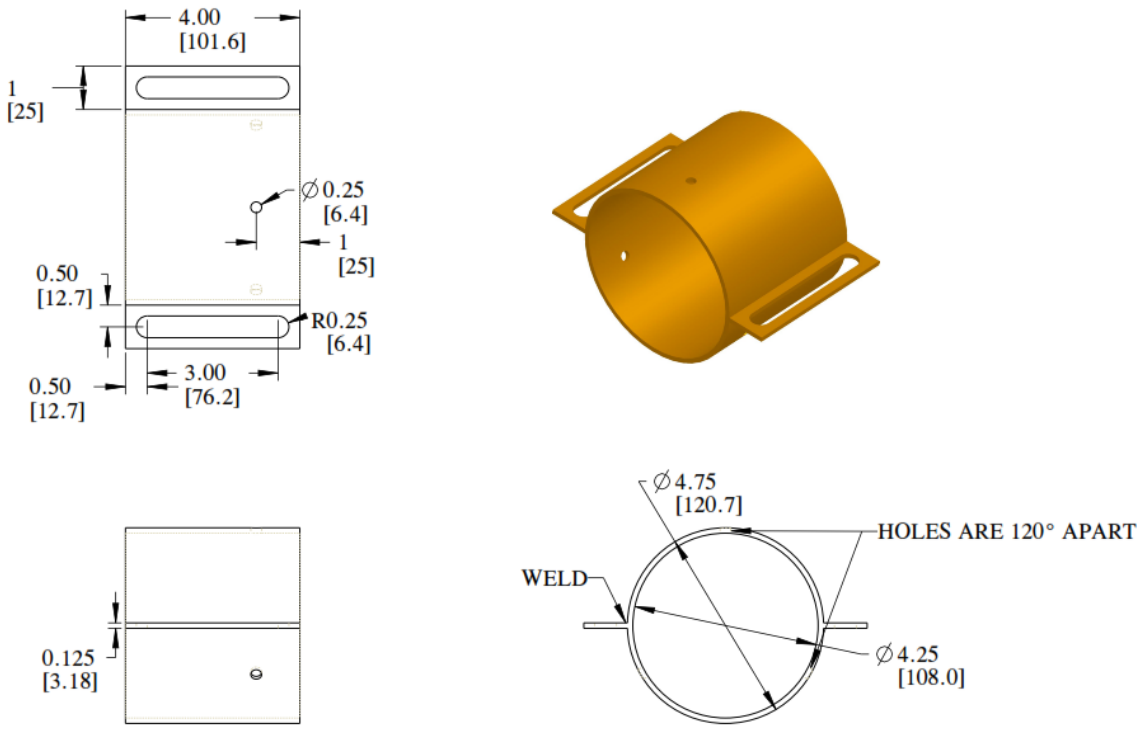

Figure 7-S-4. Dimensioned Drawing of the Coupling

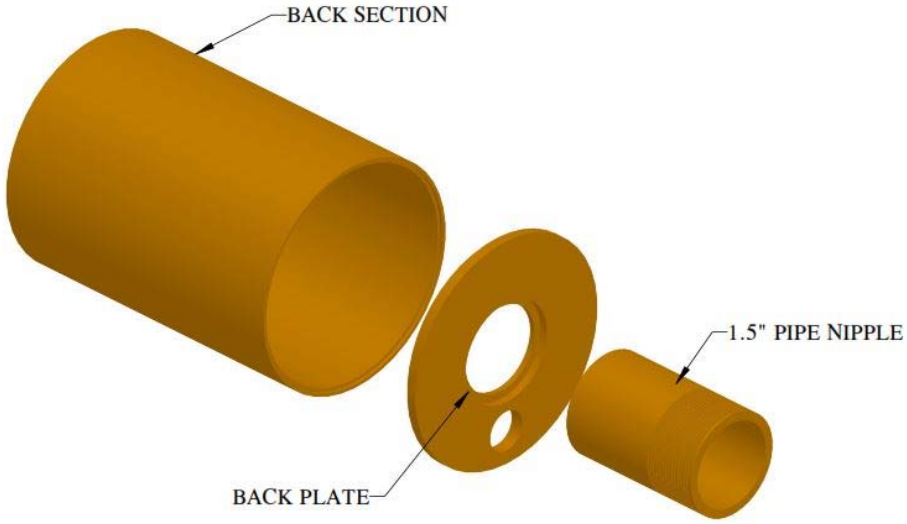

Figure 7-S-5. Back Section Components - Exploded View

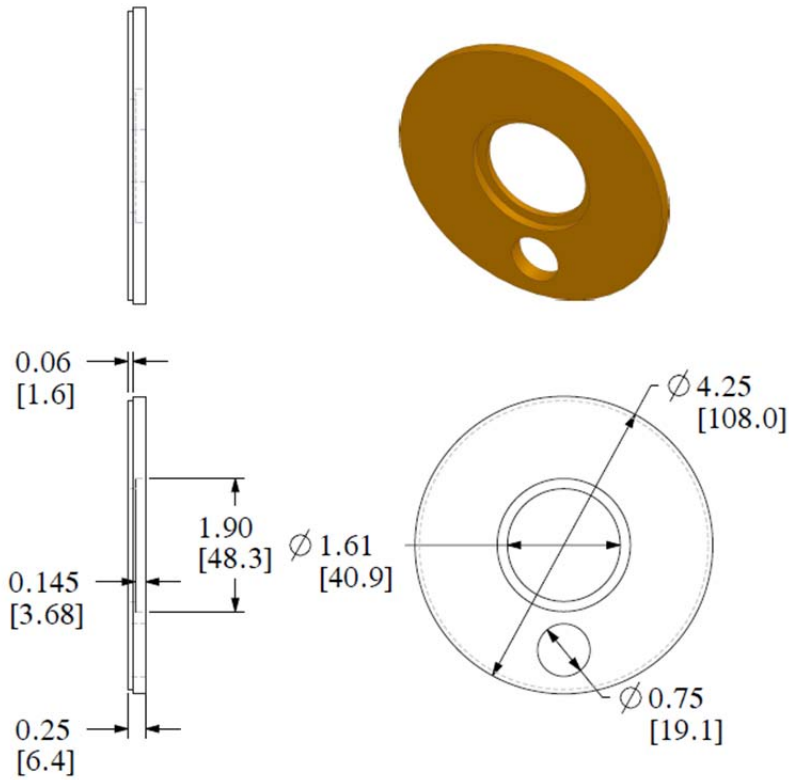

Figure 7-S-6. Dimensioned Drawing of the Back Plate

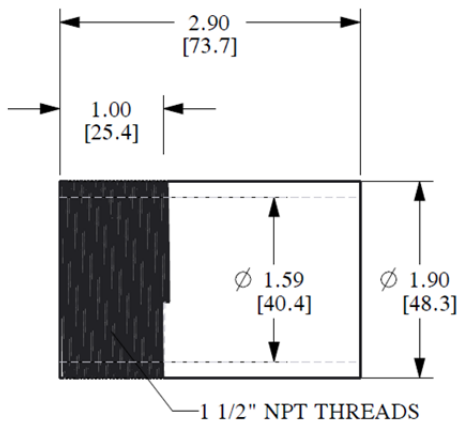

Figure 7-S-7. Dimensioned Drawing of the Pipe Nipple

Sonic Nozzle

The Sonic burner airflow is regulated with a sonic nozzle, which will deliver a constant mass flow rate depending on the supplied inlet air pressure (figure 7-S-8). The nozzle is constructed from stainless steel with 1-inch NPT male thread ends. The throat diameter must be 0.25 inches (6.3 mm), which will deliver a mass flow rate, in standard cubic feet per minute, as a function of inlet pressure, in pounds per square inch gauge, at a rate of

$$\dot{m} = 0.89 * P_i + 12.43$$

The exact inlet air pressure, and hence mass flow rate, will be test-method specific and is described in the respective chapter. The nozzle that the FAA has used to develop the Sonic burner is manufactured by Fox Venturi Products of Dover, New Jersey, and is identified by part number 612021-8.

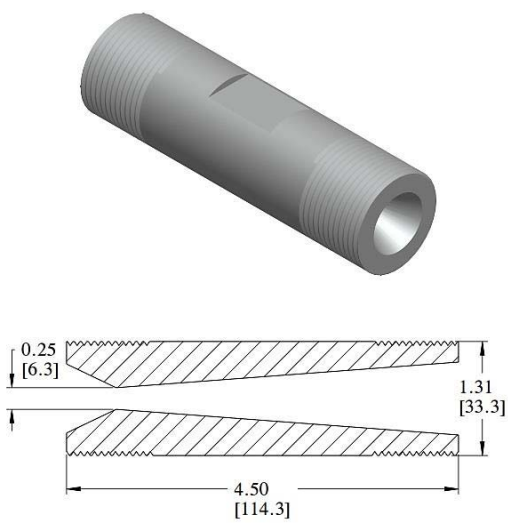

Figure 7-S-8. Schematic of the Sonic Nozzle with Cutaway View Showing Converging and Diverging Interior Sections

Air Pressure Regulator

The air pressure regulator is critical to maintaining the stability of the airflow supplied to the burner. The regulator should have 1-inch NPT female connections, at least one pressure tap for measurement of outlet pressure, and should regulate over the range at which the burner is normally operated (figure 7-S-9). The regulator must also maintain the desired pressure for the duration of a test. A suitable regulator is available from Grainger, item number 4ZM10 (manufactured by Speedaire) with an adjustment range of 5-125 lbs/in^2 (0.034-0.862 MPa). Another suitable regulator is available from MSC Industrial, part number 73535627, manufactured by Parker (model R119-08CG/M2) with an adjustment range of 2-125 lbs/in^2 (0.014-0.862 MPa).

NOTE: A 1-inch NPT "tee-fitting" or similar 1-inch NPT fitting may be added between the regulator and sonic nozzle for a more accurate or additional air pressure measurement location.

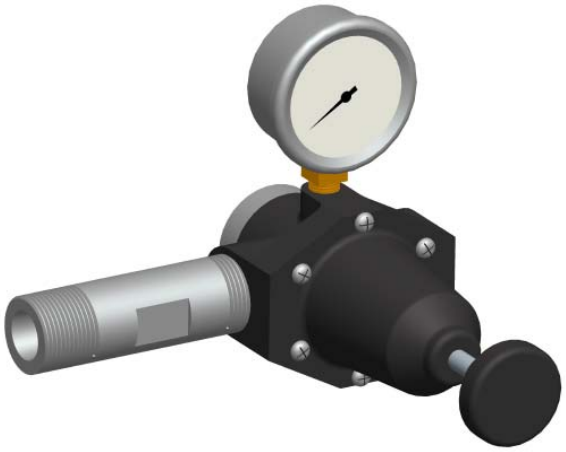

Figure 7-S-9. Schematic of Air Pressure Regulator with Sonic Nozzle Attached

Air Pressure Measurement Device

The air pressure measured just prior to the sonic orifice is critical to the proper mass flow rate of air through the sonic nozzle. The pressure gauge or transducer must have NIST (or equivalent) traceable certification with a $\pm$ 2% accuracy or less. Digital gauges capable of reading in increments of 1 lbs/in^2 (0.007 MPa) or less are recommended if a pressure transducer is not used. Should an analog gauge be used (figure 7-S-10), it should be glycerin-filled to reduce needle flutter, and have a dial that is easily read. The gauge or transducer must also have a working range appropriately suited for the range of air pressures typically used during tests. A suitable pressure transducer is supplied by Omega Engineering, part number PX329-100G5V. A suitable digital gauge is supplied by Omega Engineering, part number DPG1001B-100G; a suitable analog gauge is supplied by McMaster-Carr, part number 4053K23with a 0-60 psi (0-0.414 MPa) pressure range.

Figure 7-S-10. Analog Pressure Gauge

Muffler

An air flow muffler is used to reduce the high frequency noise created by the air expanding from the sonic nozzle throat. The 2.625-inch (66.7-mm) outside diameter muffler has 1.5-inch NPT female thread connections, an overall length of 12 inches (305 mm), and has no internal baffles or tubes. A suitable muffler is supplied by McMaster-Carr, part number 5889K73 (figure 7-S-11). Low pressure-drop polyurethane foam must be used to further reduce the noise issuing from the burner. The foam can be cut into a cylinder 3 inches (76.2 mm) in diameter by 12 inches (305 mm) long and should have a density of approximately 1.20-1.50 lbs/ft^3 (19.2-24.0 kg/m^3)with a porosity of approximately 20 pores/inch (787 pores/m). It is necessary to affix two pieces of safety wire to the muffler's internal steel mesh at the outlet end to prevent the foam cylinder from moving out of position and into the burner housing. The two wires should be arranged perpendicular to each other in a cross pattern and have a wire diameter of 0.032 inches (0.8 mm) or less (figure 7-S-12). The male outlet of the sonic nozzle connects to a 1-inch NPT female to 1.5-inch male hex reducing bushing. The hex bushing male outlet connects to the intake side of the muffler via a 1.5-inch NPT female to 1.5-inch NPT male, 90-degree, Schedule 40 standard-wall steel street elbow.

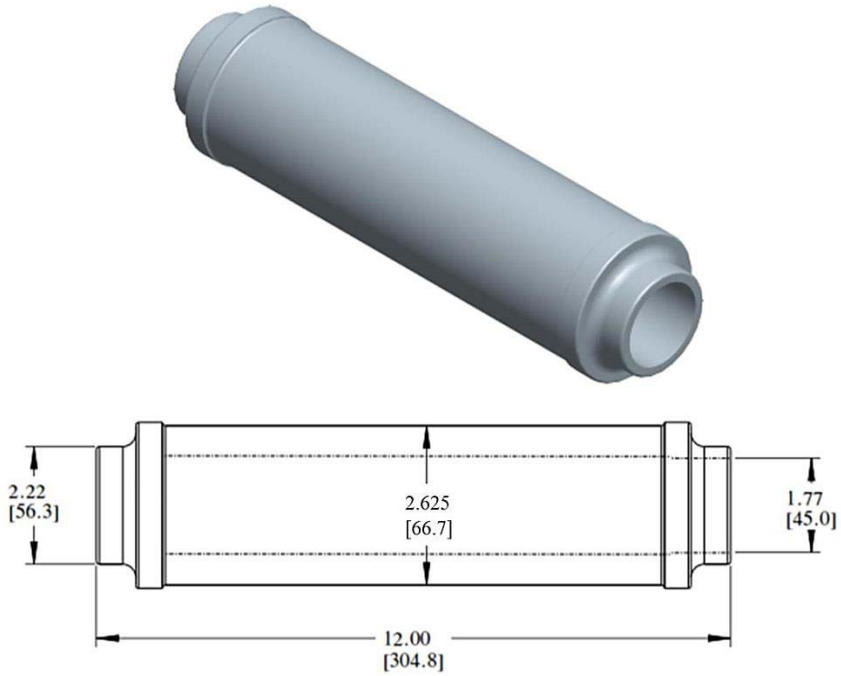

Figure 7-S-11. Schematic of the Muffler

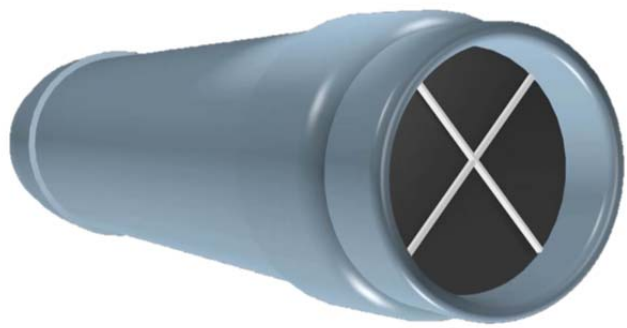

Figure 7-S-12. Safety Wire Affixed to inside of the Muffler for Restraining Foam Insert

Air Temperature

The temperature of the inlet air measured at the sonic orifice must be maintained at 50 ± 10°F (10°C ± 6°C) for the duration of a test. This can be achieved by constructing a heat exchange system as described later in this section.

Air Diffusion Using Stator and Turbulator

The stator and turbulator are used to deflect and diffuse the airflow within the Sonic burner. Three-dimensional drawing files can be used to fabricate the components on a Computer Numerical Control (CNC) milling machine. These files can be downloaded from the Fire Safety Website:

http://www.fire.tc.faa.gov/materials/burnthru/nexgen.stm

Stator

The stator is a four-vane internal component that creates a swirling of internal airflow, and aligns the fuel tube with the center axis of the draft tube (figure 7-S-13). The stator is 4 inches (102 mm) in diameter and should have a snug fit when placed inside the draft tube. A suitable stator is supplied by Marlin Engineering, part number ME1513-3.

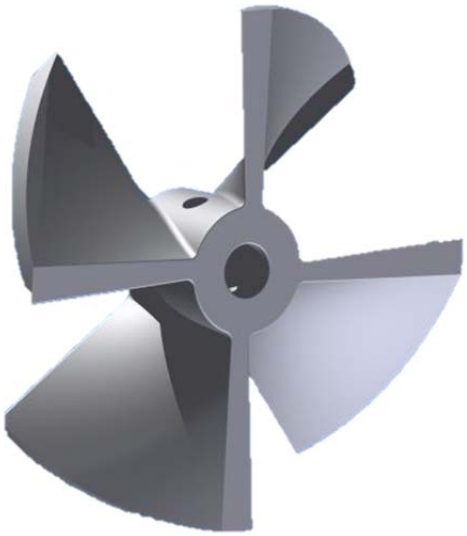

Figure 7-S-13. Stator

Turbulator

The turbulator is a 4-inch (102-mm) diameter component, for air swirling, placed in the end of the draft tube. The center hole is 2.75 inches (69.9 mm) in diameter (figure 7-S-14). A suitable turbulator is supplied by Marlin Engineering, part number ME1512-1.

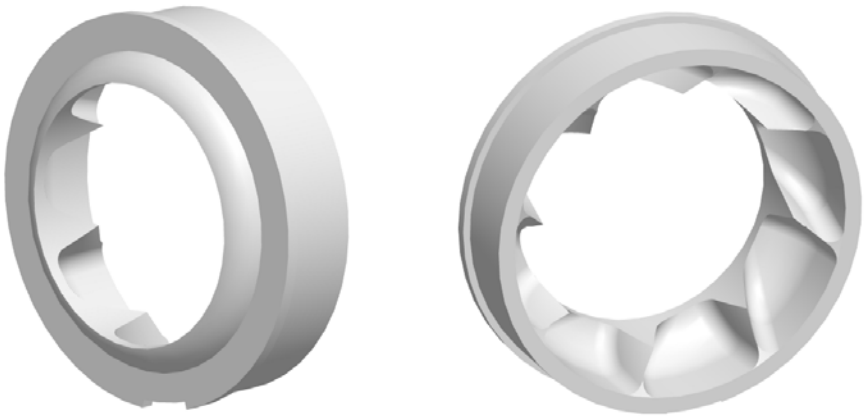

Figure 7-S-14. Turbulator, Front View and Back View

Stator and Turbulator Configuration

The stator slides onto the fuel rail, is oriented in the proper direction, and is locked into place with a set screw located at the twelve o'clock position (figure 7-S-15). The turbulator is placed on the end of the draft tube with the tab located at the six o'clock position (figure 7-S-16). The typical configuration positions the face of the stator approximately 2.6875 inches (68.263 mm) from the exit plane of the turbulator (figure 7-S-17). Refer to the Preparation of Apparatus section of this supplement for the exact positioning of the stator and turbulator.

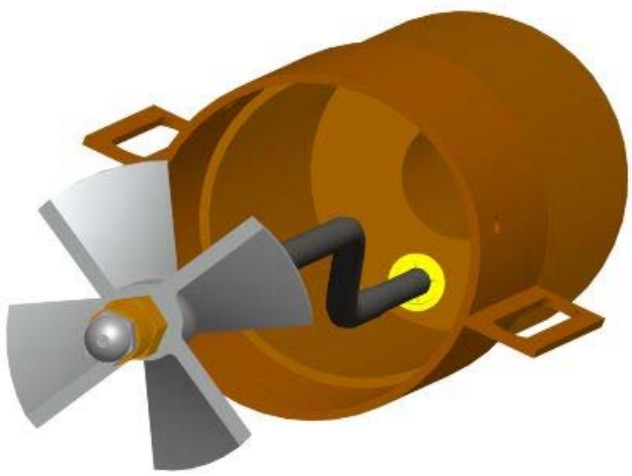

Figure 7-S-15. Location of the Stator on the Fuel Tube

Figure 7-S-16. Position of Turbulator at the end of the Draft Tube

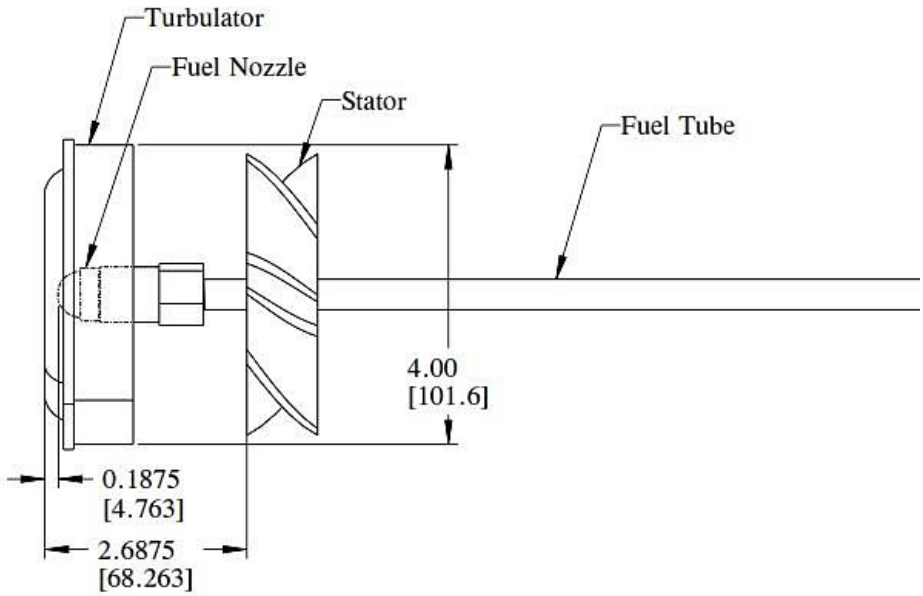

Figure 7-S-17. Typical Configuration of the Stator and Turbulator

Fuel System

A method of fuel pressurization is required to deliver the proper amount of fuel to the spray nozzle for consistent atomization. The delivered fuel pressure is typically in the range of 100 – 120 lbs/in^2 (0.689 – 0.827 MPa), and must maintain the desired pressure for the duration of a test. A suitable method of fuel pressurization is a pressurized fuel tank (figure 7-S-18). Alternatively, a fuel pump may be used provided it can maintain the required pressure for the duration of a test with minimal fluctuation so as to maintain 2 gal/hr ± 0.1 gal/hr (7.57 ± 0.38 L/hr).

A pressure vessel, such as McMaster-Carr part number 1584K7 with a 15-gallon (56.8-liter) capacity, measuring 12 inches (305 mm) in diameter and 33 inches (838 mm) tall, or 35 inches (889 mm) tall including mounting base, can be used to contain the fuel. The tank has various fittings on the top, bottom, and sides to allow for connection of pipe fittings for filling, discharging, fuel quantity level, pressure measurement, pressurization, and venting. Nitrogen is used to pressurize the headspace of the fuel tank. Solenoid or manual valves can be used to start and stop the flow of fuel, nitrogen, and vent gas. The headspace gas pressure is controlled by a precision regulator, and monitored using a fuel pressure gauge. A high pressure translucent tube can be used for indicating the fuel level in the tank.

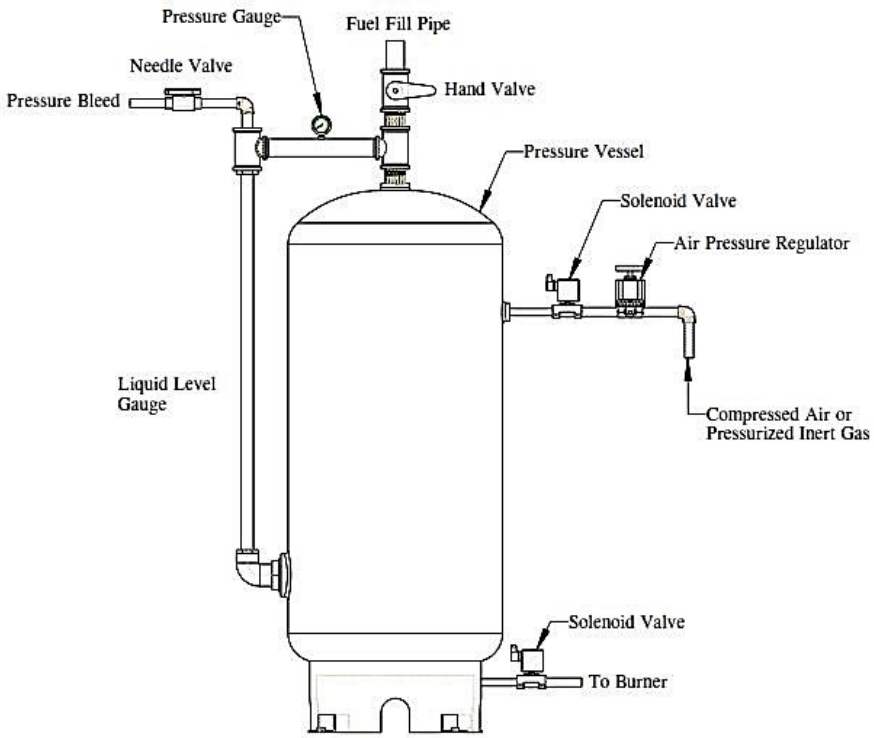

Figure 7-S-18. Schematic of Pressurized Fuel Tank System

Fuel Pressure Measurement Device

A suitable pressure gauge or transducer must be used to monitor the pressure inside the fuel tank, which is critical for establishing the proper flow of fuel into the fuel nozzle. The pressure gauge or transducer must have NIST (or equivalent) traceable certification with a $\pm$ 2% accuracy or less. If a pressure transducer is not used, digital gauges capable of reading in increments of 1 lbs/in^2 (0.007 MPa) or less are recommended. If an analog gauge is used, it should be glycerin-filled to reduce needle flutter, and have an easily readable dial. The gauge must also have a working range appropriately suited for the range of fuel pressures typically used during tests. A suitable pressure transducer is supplied by Omega Engineering, part number PX329-150G5V. A suitable digital gauge is supplied by Omega Engineering, part number DPG1001B-500G; a suitable analog gauge is supplied by McMaster-Carr, part number 4053K23 with a 0-160 psi (0-1.1 MPa) pressure range (figure 7-S-19).

Figure 7-S-19. Analog Fuel Pressure Gauge

Fuel Temperature

The fuel entering the burner fuel tube must be maintained at a temperature range of 42 ± 10°F (5.5 ± 5.5°C) for the duration of a test. This can be achieved by constructing a heat exchange system as described later in this video.

Fuel Tube

The fuel tube in the Sonic burner is designed to allow both the fuel nozzle and the airflow to be aligned with the axis of the draft tube. This is accomplished by creating two bends in the section of the fuel tube that enters the back of the burner (figure 7-S-20). The tube is constructed from schedule-80, thick wall, 0.125-inch (3.175-mm) steel pipe with an outside diameter of 0.405-inch (10.287-mm), an inside diameter of 0.215-inch (5.461-mm), and a wall thickness of 0.095-inch (2.413-mm). The pipe is cut to a length of approximately 21.5 inches (546.1 mm); a section of the outer wall is removed on a lathe to fit the pipe through the keyless bushing that holds the tube in place. The outer diameter of the fuel tube is reduced to approximately 0.3750 inch (9.525 mm) for a length of 4 inches (101.6 mm) at one end. The tube is then shaped with a pipe bender according to the dimensions in the drawing. A die is used to thread both ends of the tube with 0.125-inch NPT pipe threads. Heavy duty 0.004-inch-thick (0.102-mm-thick) thread seal tape is wrapped on the pipe threads to prevent fuel leakage. A 1.375-inch-long (34.925-mm-long) brass fuel nozzle adapter is threaded onto the front end of the fuel tube where the fuel nozzle will be attached. A keyless bushing (Fenner Drives p/n 6202109) is used to hold the back end of the fuel tube in place. A pipe fitting is attached to the back end of the fuel tube to connect the pressurized fuel system to the fuel tube.

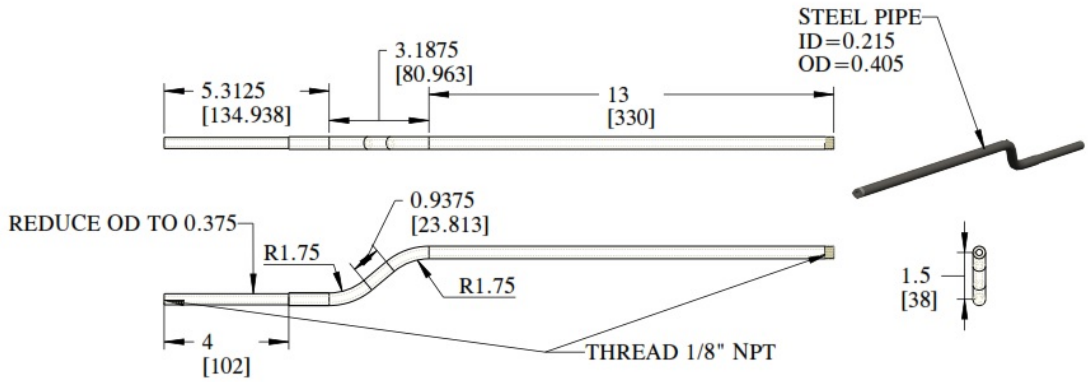

Figure 7-S-20. Schematic of the Fuel Tube

Fuel Nozzle

The fuel nozzle for the Sonic burner should be an 80-degree solid conical spray pattern oil burner nozzle. The nozzle flowrate will depend on the test method. The rated flow rate provided by the manufacturer is achieved when applying a 100 lb/in^2 (0.71 MPa) pressure to the nozzle. If a different flow rate is desired, the pressure can be adjusted accordingly to achieve a wide range of flow rates. In general, the flow rate is related to the pressure by:

$$F_d = F_r \sqrt{P_d / P_r}$$

In which F_d is the desired flow rate, F_r is the rated flow rate, P_d is the desired pressure, and P_r is the rated pressure, typically 100 psig (0.71 MPa). For example, if a 5.5-gal/hr (20.8 L/hr)-rated nozzle is operated at 120 lb/in^2 (0.83 MPa), a flow rate of 6.0 gal/hr (22.7 L/hr) will be achieved. A Delavan 80-degree 2.0 gal/hr (7.57 L/hr) B-type spray nozzle has been found suitable for this application.

Nozzle Adapter

The fuel nozzle adapter is a brass fitting 1.375 inches (34.9 mm) in length with a 0.125-inch NPT thread on the inlet side and 0.5625-inch 24 Unified Fine Thread (UNF) thread where the nozzle attaches (figure 7-S-21).

Figure 7-S-21. Fuel Nozzle and Brass Adapter

Fuel

Use jet fuel (JP-8, Jet A, or their international equivalent), or ASTM K2 fuel (Number 2 grade kerosene) to yield the desired fuel flow rate within the specified pressure range for the test method being performed. Diesel fuel may also be used, however the test condition may be more severe.

Ignition

A high voltage oil burner ignition transformer with an output of 10 kilovolts is used to create an arc across an automotive type spark plug mounted in the burner extension cone. The spark plug uses a standard 14 mm diameter thread size with a thread pitch of 1.25 mm. The threaded segment of the spark plug is 0.36 inches (9.1 mm) in length. The exposed portion of the central insulator measures 0.70 inches (17.8 mm) in length. The spark plug gap must be opened to 0.100 inches (2.5 mm) in order to consistently ignite the fuel/air charge in the burner cone (figure 7-S-22). A suitable spark plug is manufactured by Champion Products, manufacturer part number RJ19LM, and can be purchased through Grainger (www.Grainger.com), part number 12U891.

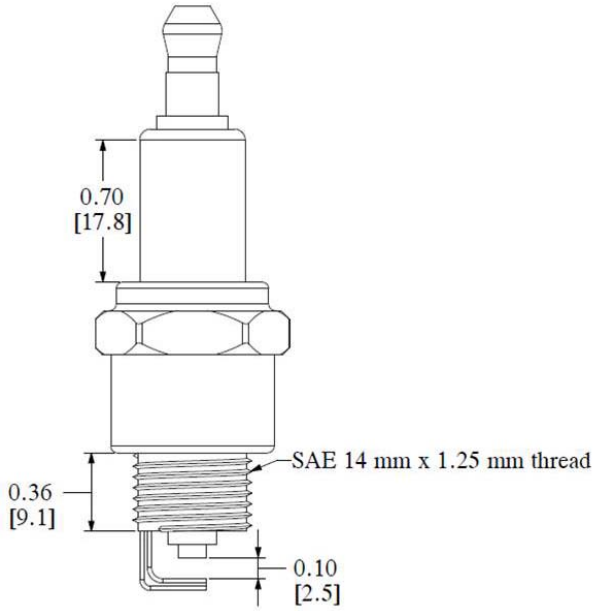

Figure 7-S-22. Dimensioned Drawing of a Spark Plug

Heat Exchange System

A heat exchange system is used to regulate the temperature of the burner inlet air and fuel as the flow rate of each is dependent upon the density of the air and fuel. A schematic of a suitable heat exchange system is displayed in figure 7-S-23. The ice bath can be constructed from an insulated cooler or a chest freezer with temperature control capability. The fuel travels through coiled copper tubing in the ice bath and out to the burner. The air is cooled in a heat exchanger, such as McMaster-Carr part number 43865K78, which has ice water traveling through the outer shell, removing heat from the air. The ice water is circulated in a closed-loop from the cooler to the heat exchanger by means of a submersible pump. The exact dimensions of the copper coils and the flowrate of the water pump will be dependent upon the particular conditions in the laboratory. Alternate methods such as active heating and cooling systems can be used, allowing greater precision, but may be more costly.

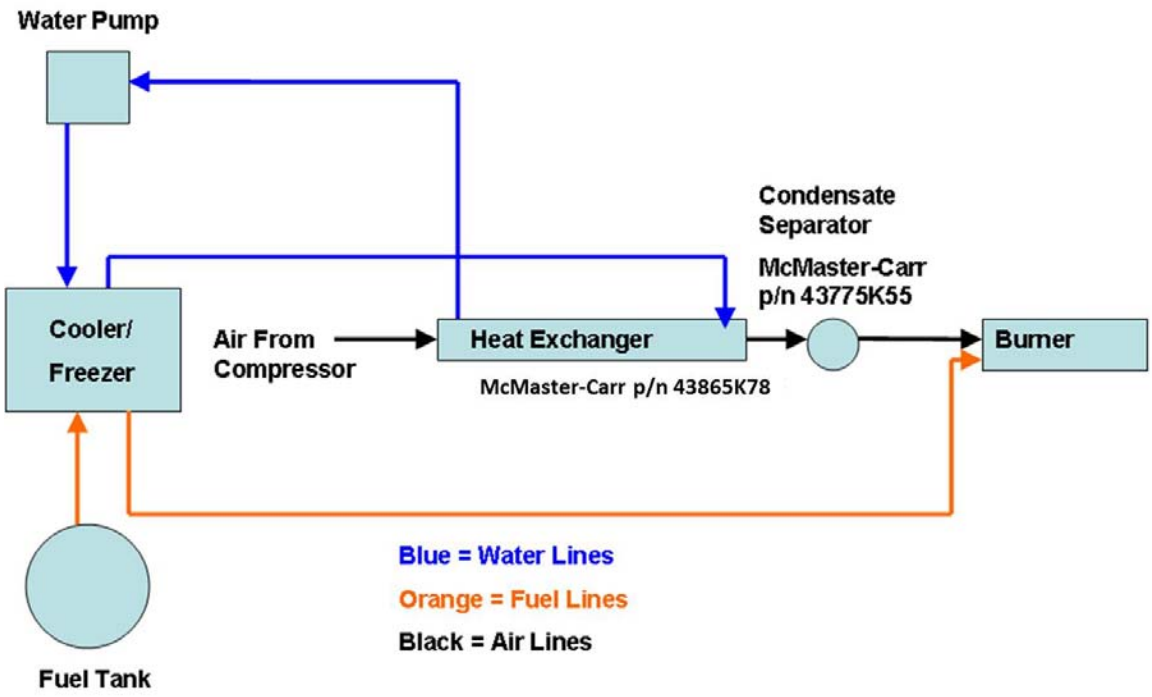

Figure 7-S-23. Schematic of Air/Fuel Heat Exchange System

Burner Cone

A 12 ± 0.125-inch (305 ± 3-mm) burner extension cone is fitted to the end of the draft tube. The cone is constructed from 16 gauge American Iron and Steel Institute (AISI) type 310 stainless steel. The cone exit plane must be 6 ± 0.250 inches (152 ± 6 mm) high and 11 ± 0.250 inches (280 ± 6 mm) wide, with a thickness of 0.0625 ± 0.015 inch (1.59 ± 0.381 mm). Refer to figures 7-S-24 and figure 7-S-25 for detailed drawings. The hot and cold cycling that occurs during typical testing can cause the cone exit plane dimensions to shift due to warpage. It is critical to check the exit plane dimensions to ensure they remain within the specified tolerances. A cone found to be out of tolerance should be repaired or replaced before continuing operation of the burner.

NOTE 1: Park type burner cones are 18 gauge 310 stainless steel or similar alloy while sonic type burners are 16 gauge 310 stainless steel.

NOTE 2: The welded seam connecting the burner cone mounting flange and burner cone extension should align with the end of the burner draft tube.

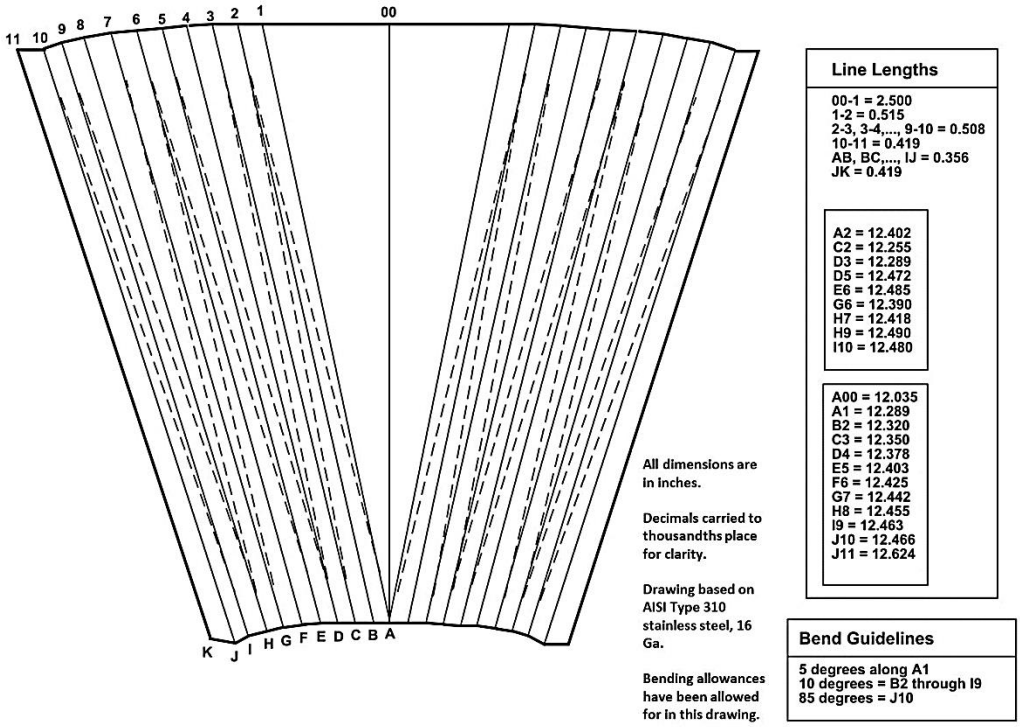

Figure 7-S-24. Burner Cone Layout and Bending Pattern

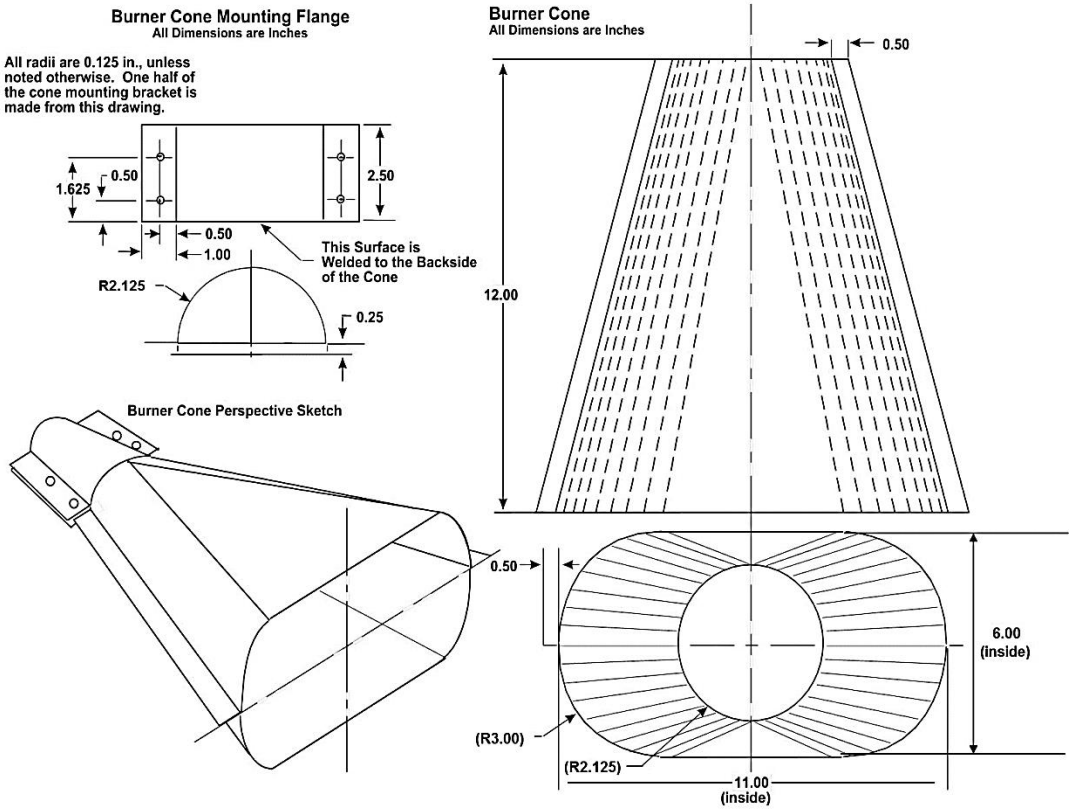

Figure 7-S-25. Burner Cone Details

Threaded Boss for Spark Plug

A threaded boss must be welded to the side of the burner extension cone for acceptance of the spark plug used to ignite the fuel charge. The threaded boss must be fabricated from American Iron and Steel Institute (AISI) type 310 stainless steel. The cylindrical boss must measure 1.125 inches (28.58 mm) in diameter, with a thickness of 0.250 inches (6.4 mm). The boss must be threaded using an SAE standard 14 mm x 1.25 mm spark plug tap (figure 7-S-26).

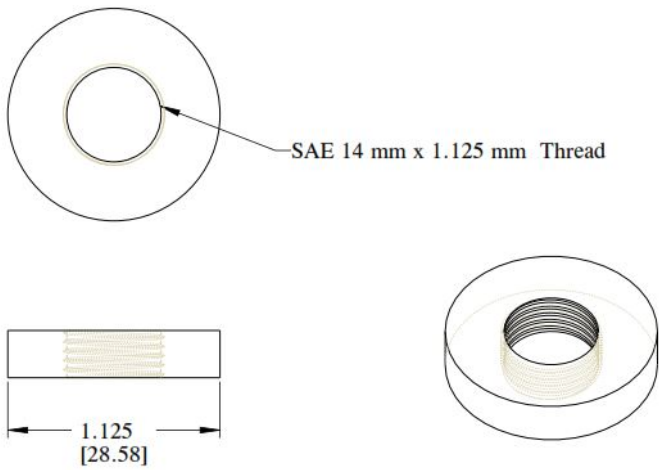

Figure 7-S-26. Threaded Boss

Burner Measurement Locations

Accurate measurements of the sonic burner inlet parameters are critical to proper operation. The measurement locations of the burner air and fuel supply are typically located just prior to entering the burner housing, or as near the burner housing as possible. An example of acceptable measurement locations of the burner air and fuel supply are indicated in figure 7-S-27.

Air Pressure

The sonic nozzle inlet pressure is measured with a suitable pressure gauge or transducer mounted just upstream from the sonic nozzle. The gauge or transducer should measure accurately in the range of 0-60 lbs/in^2 (0-0.41 MPa), with an accuracy of $\pm$ 2% maximum. Bourdon type gauges and pressure transducers have proven to be suitable for this measurement (see details in Air Pressure Measurement Device above).

Air Temperature

The burner air temperature is measured with a 0.125-inch (3.2 mm) diameter, ceramic packed, 310 stainless steel sheathed, type K (Chromel-Alumel) grounded junction thermocouple with a nominal 24 AWG conductor. The thermocouple should be inserted into the air stream just upstream of the sonic nozzle with the tip located near the center of the air supply stream. In some testing situations, flame radiation may be incident upon the inlet air lines, causing heating of the air and possible bursting of flexible hoses. It is important to

shield all air lines with thermal wrapping to prevent an unsafe condition and maintain steady air temperature.

Fuel Pressure

The burner fuel pressure is measured with a suitable pressure gauge (see Fuel Pressure Measurement Device above) mounted in a T-connection in the fuel inlet line near the back of the burner. It is important that the measurement location be as close to the back of the burner as possible to accurately measure the fuel pressure at the point it enters the burner.

Fuel Temperature

The burner fuel temperature is measured with a 0.125-inch (3.2 mm) diameter, ceramic packed, 310 stainless steel sheathed, type K (Chromel-Alumel) grounded junction thermocouple with a nominal 24 AWG conductor. The thermocouple should be mounted in a T-fitting such that the probe tip is located near the center of the fuel tube. In some testing situations, flame radiation may be incident upon the inlet fuel lines, causing heating of the fuel and possible bursting of flexible hoses. It is important to shield all fuel lines with thermal wrapping to prevent an unsafe condition and maintain steady air temperature.

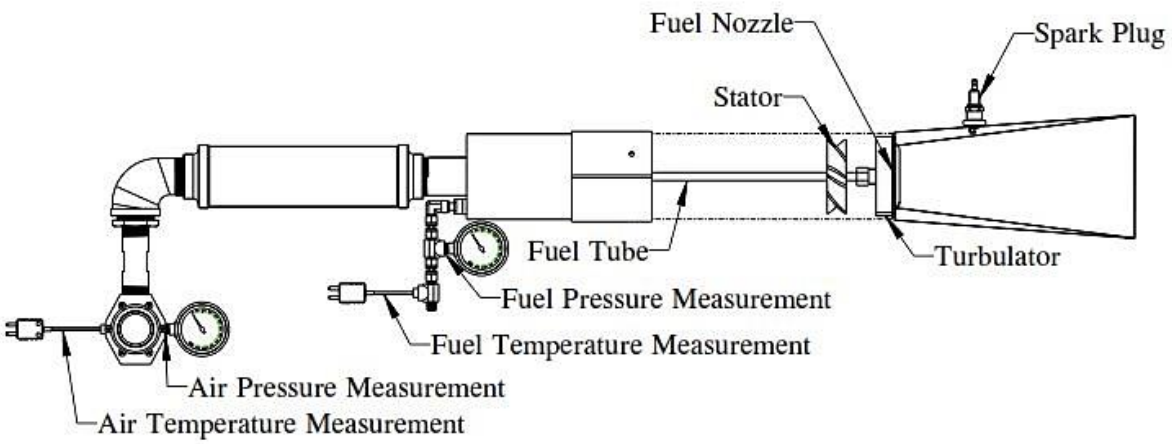

Figure 7-S-27. Burner Schematic Showing Inlet Measurement Locations

Sonic Burner Configuration

Fuel Nozzle Location

The tip of the fuel nozzle, or fuel exit plane, must be located 0.1875 ± 0.020 inch (4.763 ± 0.5 mm) from the exit plane of the turbulator (figure 7-S-28).

Stator Adjustment

The stator is positioned by adjusting its translational position as well as its axial position on the fuel rod.

Stator Translational Position

The front face of the stator must be located 2.6875 ± 0.020 inches (68.263 ± 0.5 mm) from the exit plane of the turbulator (figure 7-S-28). This stator translational position is also 2.5 inches (63.5 mm) from the tip of the fuel nozzle.

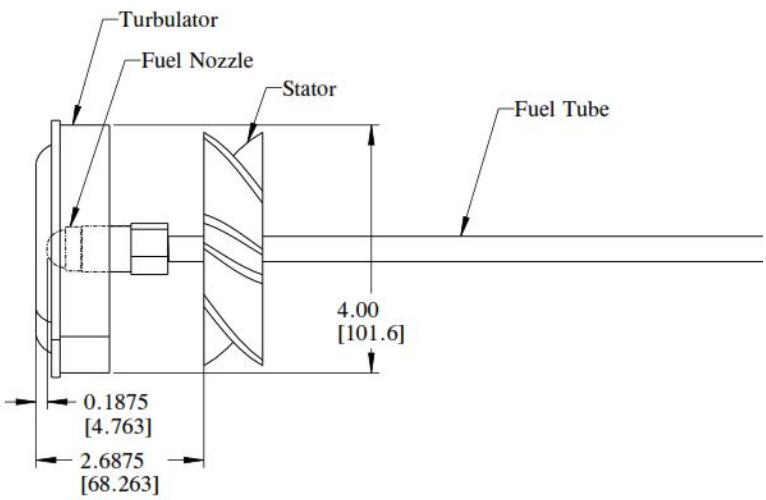

Figure 7-S-28 Fuel Nozzle and Stator Locations

Stator Axial Position

The line running through the set screw and geometric center of stator will be used as a reference for properly orienting the rotational position of the stator. The stator must be positioned so the reference line angle is 0 degrees (12 o'clock) from the zero position when looking into the burner draft tube. (figure 7-S-29).

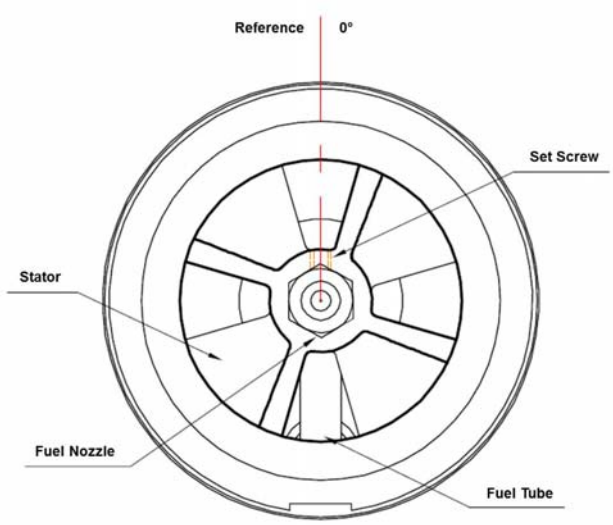

Figure 7-S-29 Stator Axial Position (looking into draft tube)

Spark Plug Location

The spark plug should be mounted in a threaded boss, on the surface of the burner cone facing away from the vertical sample frame. The spark plug is located at a distance 6 ± 0.125 inches (152 ± 3 mm) from the end (intake plane of burner cone) (figure 7-S-30).

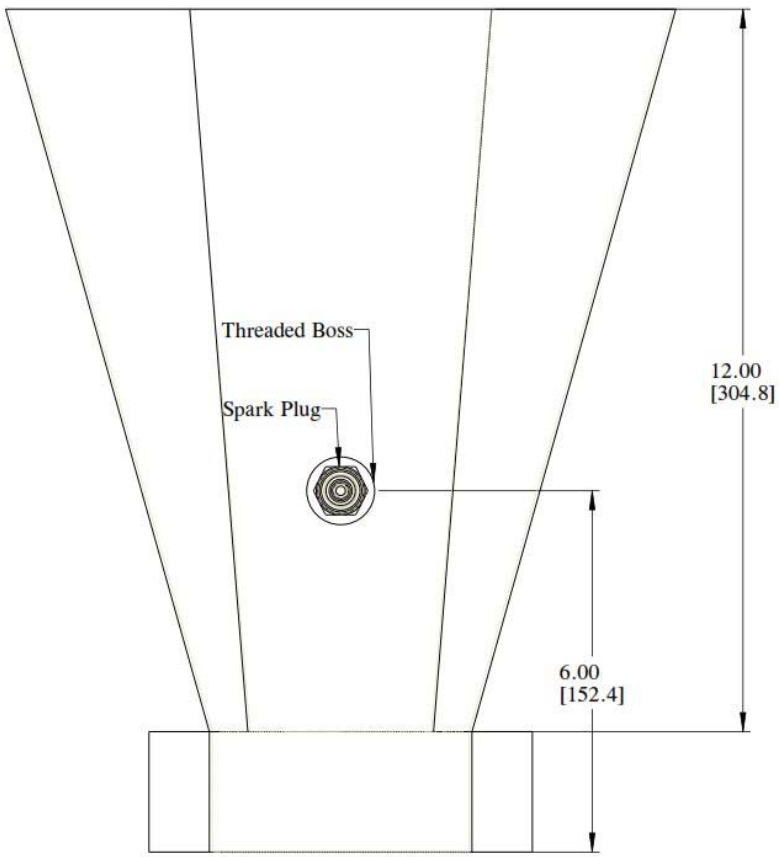

Figure 7-S-30. Spark Plug Location in Burner Cone

Spark Plug Gap

The spark plug gap (distance) between the two electrodes must be 0.100 inches (2.5 mm) as shown in figure 7-S-31.

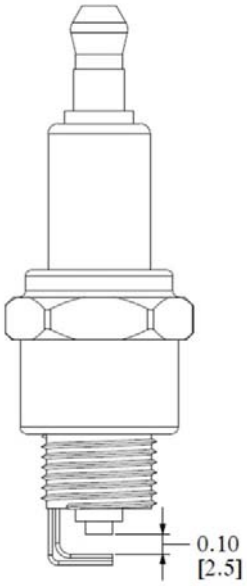

Figure 7-S-31. Spark Plug Gap Measurement

Spark Plug Wire Routing

The length and arrangement of the spark plug wires must be monitored to prevent heat damage during flame consistency validation and testing. Once the air/fuel mixture is ignited, the outside surface temperature of the burner cone will increase rapidly, becoming capable of damaging the wire if it comes in contact with the cone. The spark plug wire should be carefully routed to prevent contact with the cone or other hot surfaces, and should also be shielded in a heat-resistant covering to further protect it from convective heat damage from the burner flames. The wire can be routed as shown in figure 7-S-32, in which the wire does not contact any components in the vicinity of the burner cone.

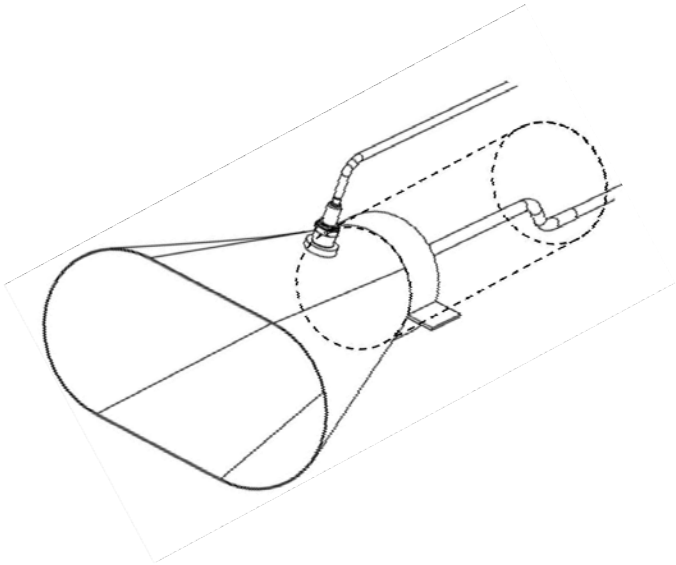

7-S-32. Proper Routing of the Spark Plug Wires

Volumetric Air Flow Control

The volumetric airflow is controlled via a regulated sonic orifice. Adjust the upstream supply air pressure to 45 lbs/in^2 $\pm$ 1 lbs/in^2 (0.31 $\pm$ 0.007 MPa). The intake air temperature must be maintained within the range of 40°F to 60°F (4°C to 16°C). For additional details, refer to sections "Sonic Nozzle" and "Air Pressure Regulator" in this supplement.

Fuel Flow Calibration

If a calibrated flow meter is not available, measure the fuel flow directly using a length of Tygon® tubing and appropriately sized graduated cylinder. Slip the Tygon® tubing over the end of the fuel nozzle, making certain to establish a good seal. Direct the exit of the Tygon® tubing into a small bucket or other collection basin. Turn on the fuel solenoid, making sure the ignition system is off. After establishing a steady stream of fuel flow, simultaneously direct the tubing exit into the graduated cylinder while beginning the stopwatch or timing device. Collect the fuel for a 2-minute period, making certain to immediately direct the tubing exit away from the graduated cylinder at precisely 2 minutes. Calculate the flow rate and ensure that it is 2 ± 0.1 gal/hr (7.57 ± 0.38 L/hr). If the flow rate is not within the tolerance, adjust the fuel pressure accordingly. The temperature of the fuel must be maintained within the range of 32°F to 52°F (0°C to 11°C).

NOTE: It is important to establish a steady stream of fuel before starting the fuel flow measurement process. It is recommended the fuel flow steadily from the hose for a minimum 10-second period before collecting fuel in the graduated cylinder.

Instrumentation and Supporting Equipment

Burner Flame Temperature Consistency Validation Thermocouples

Seven thermocouples must be used to check the flame temperature of the burner. The thermocouples must be 0.125-inch (3.2-mm) diameter, ceramic packed, 310 stainless steel sheathed, type K (Chromel-Alumel), grounded-junction with a nominal 24 American Wire Gauge (AWG) size conductor. The seven thermocouples must be attached to a steel mounting plate to form a thermocouple rake for placement in the test stand during the burner flame consistency validation (figure 7-S-33). The thermocouple mounting plate should be a minimum of 4 inches (102 mm) away from the tips of the thermocouples.

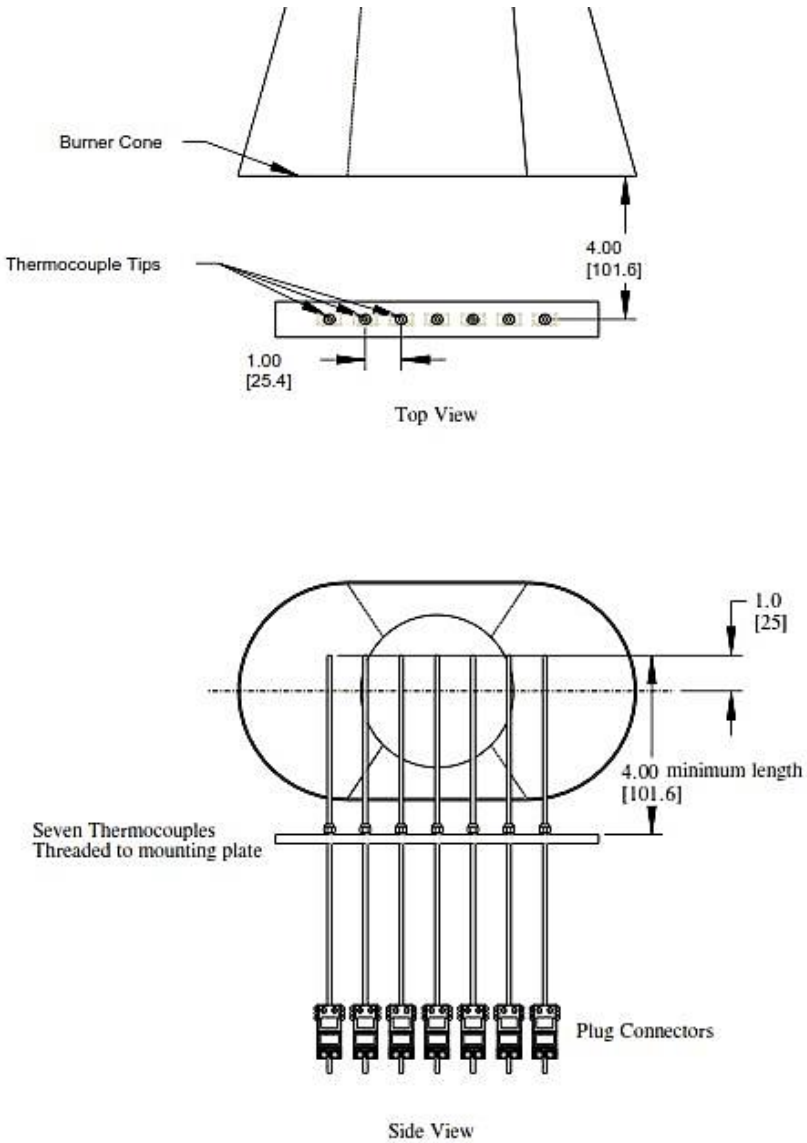

Figure 7-S-33. Top and Side View of Thermocouple Rake Bracket

Burner Flame Temperature Consistency Validation

Examine and clean the burner cone of any evidence of buildup of combustion products, soot, etc. Soot build-up inside the cone may affect the flame characteristics and cause difficulties during flame consistency validation. Since the burner cone may distort with time, dimensions should be checked periodically.

Mount the thermocouple rake on a movable stand that is capable of being quickly translated into position in front of the burner. Move the rake into flame validation test position and check the distance of each of the seven thermocouples to ensure that they are located 4 ± 0.125 inches (102 ± 3 mm) from the vertical plane of the burner cone exit. Ensure that the horizontal centerline of the thermocouples are offset 1 ± 0.0625 inch (25.4 ± 1.6 mm) above the horizontal centerline of the burner cone (see figure 7-S-33). Place the center

thermocouple (thermocouple number 4) in front of the vertical centerline of the burner cone exit. Note that the thermocouple rake movable stand must incorporate detents that ensure proper centering of the thermocouple rake with respect to the burner cone, so that rapid positioning of the rake can be achieved during the validation procedure. Once the proper position is established, move the thermocouple rake away, and move back into the calibration position to re-check distances. When all distances and positions are confirmed, move the thermocouple rake away from burner.

While the thermocouple rake is away from the burner, turn on the spark plug, pressurized air and fuel flow, and light the burner. Allow burner to warm up for a period of 2 minutes. After warm-up, move the thermocouple rake into position and allow 1 minute for thermocouple stabilization, then record the temperature of each of the seven thermocouples once every second for a period of 30 seconds. Remove thermocouple rake from flame temperature validation position and turn off burner. Calculate the average temperature of each thermocouple over this period and record. Although not a requirement for testing, the recommended average temperature of each of the seven thermocouples should be 1700°F ± 100°F (927°C ± 55°C). The burner should be rechecked to ensure it is configured properly if temperatures are measured outside of this recommended range. A fine adjustment of the internal stator orientation and/or distance from the end of the draft tube may be necessary to achieve the required temperatures, provided the adjustments are within allowable tolerances. If no problems are found with the burner, any thermocouple reading outside of this range may require replacement. It is recommended that burner flame temperature be validated prior to running a series of tests to ensure test result consistency.

NOTE: The thermocouples are subjected to high temperature durations during calibration. Because of this type of cycling, the thermocouples may degrade with time. Small but continuing decreases or extreme variations in temperature or “no” temperature reading at all are signs that the thermocouple or thermocouples are degrading or open circuits have occurred. In this case, the thermocouple or thermocouples should be replaced in order to maintain accuracy in calibrating the burner. It is recommended that a record be kept for the amount of time and number of heat cycles the thermocouples are exposed to the oil burner’s flame.